Flamingo high-low

Exploded views / Part lists

Rev. date (2024-06)

On the following pages you will find the parts used to assemble this product. Please note that some spare parts cannot be purchased individually but are part of a complete kit. Please also note that for some spare parts extra delivery time may occur.

R82 A/S
Parallelvej 3
8751 Gedved
Denmark

Tel: +45 79 68 58 88
Fax: +45 75 66 51 92
E-mail: R82@R82.dk
Web: www.etac.com

Cvr. Nr.: 16 20 21 85
Swift: JYBA DKKK
Iban No.:DK8072450002003501

Contents

Seat 3
Frame 5
Accessories 8
Armrest 11
Footrest 13
Side support 15

R82 A/S
Parallelvej 3
8751 Gedved
Denmark

Tel: +45 79 68 58 88
Fax: +45 75 66 51 92
E-mail: R82@R82.dk
Web: www.etac.com

Cvr. Nr.: 16 20 21 85
Swift: JYBA DKKK
Iban No.:DK8072450002003501

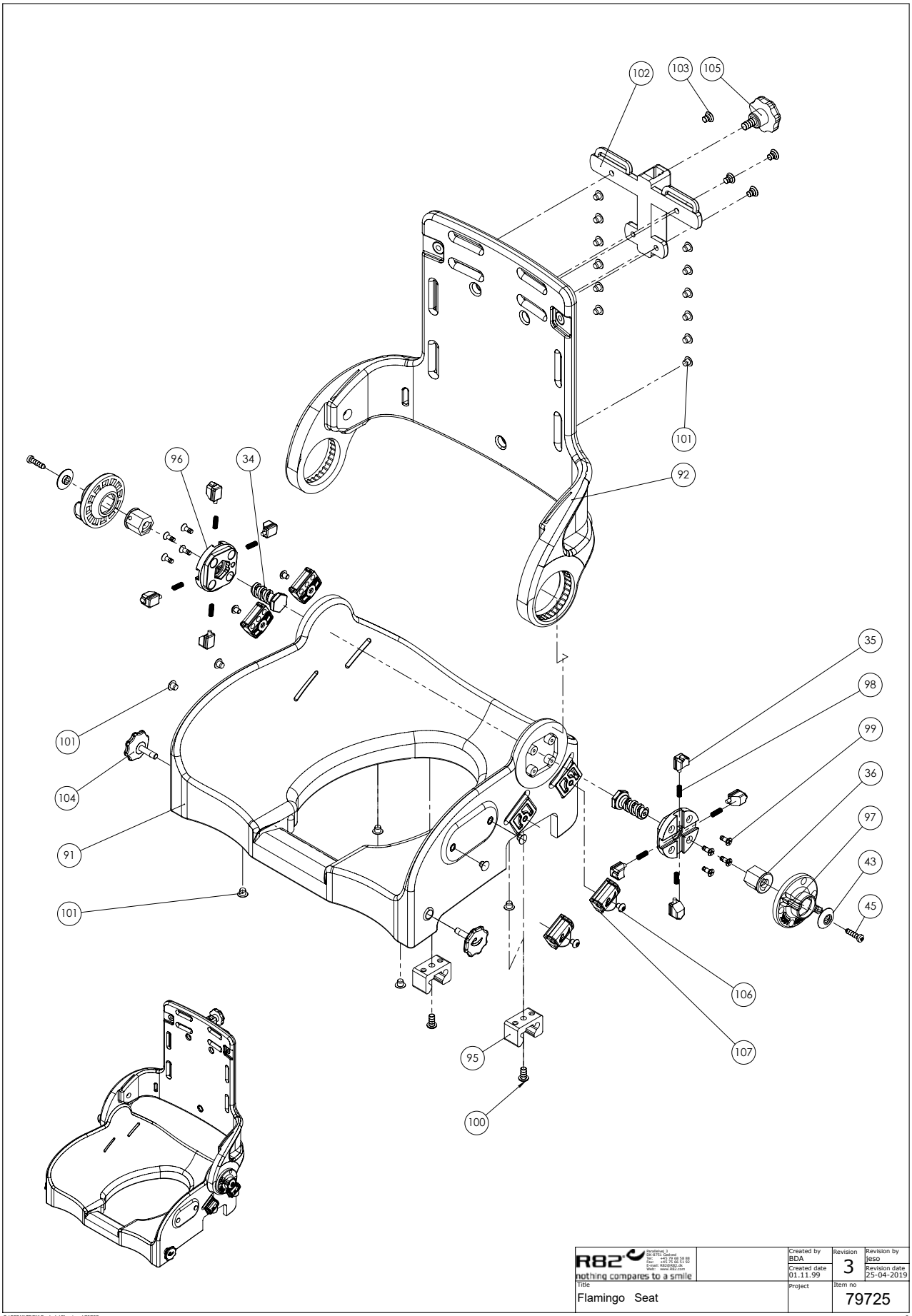
102
103
105
101
92
96
34
35
98
99
36
97
43
45
101
104
91
101
106
107
95
100
R82
nothing compares to a smile
Parallelvej 3
DK-8751 Gedved
Tel: +45 79 68 58 88
Fax: +45 75 66 51 92
E-mail: R82@R82.dk
Web: www.R82.com
Created by
BDA
Created date
01.11.99
Revision
3
Revision by
Jeso
Revision date
25-04-2019
Title
Flamingo Seat
Project
Item no
79725
C:\EPDM\TEGN\Explode\Flamingo\79725
3

Position	No.	Description	Quantity	Unit of Measure	Ean code
36+43 45+96 97+98 99	880153	Angle adj. kit Flamingo back	PCS	1	5707292429551
34	71136	Thread spindle, Flamingo	PCS	2	5707292104410
35	71133	T-flange, Flamingo	PCS	8	5707292104380
36	71128	Thread nut for angle adj.	PCS	2	5707292104359
43	71164	Knob Ø23, 5 for handle	PCS	2	5707292104540
45	1811112	Sheet metal screw 4,8*19 phx	PCS	2	5707292452184
91*	71302-1	Flamingo Seat shell, size 1	PCS	1	5707292629401
	71303-1	Flamingo Seat shell, size 2	PCS	1	5707292629418
	71304-1	Flamingo Seat shell, size 3	PCS	1	5707292629425
	71305-1	Flamingo Seat shell, size 4	PCS	1	5707292629432
92*	71312	Flamingo back shell, size 1	PCS	1	5707292105028
	71313	Flamingo back shell, size 2	PCS	1	5707292105035
	71314	FLAMINGO BACK SHELL, SIZE 3	PCS	1	5707292105042
	71315	Flamingo back shell, size 4	PCS	1	5707292105059
95	102429	Seatlock for Flamingo	PCS	2	5707292562036
97	71144	Hand wheel, Flamingo	PCS	2	5707292104427
99	1940038	ECO-SYN UH Ø4*14	PCS	8	5707292465597
100	0659200	Button head screw 6*12 stainl.	PCS	2	5707292139436
101	1310536	Covering button,white 13*5,0mm	PCS	16	5707292397911
102	81138-90	Mounting for neck support	PCS	1	5707292227157
103	0609727	Stainless insex 6x12 uh	PCS	4	5707292138484
104	112708	Knob for Seat m6x23	PCS	2	5707292604286
105	3501050	Star grip Ø40 M8*15mm white	PCS	1	5707292146717
106	0631953	Button head M5*6, stainless	PCS	4	5707292599988
107	110202	Snap Lock R82-25 With ø6	PCS	4	5707292575913

R82 A/S
Parallelvej 3
8751 Gedved
Denmark

Tel: +45 79 68 58 88
Fax: +45 75 66 51 92
E-mail: R82@R82.dk
Web: www.etac.com

Cvr. Nr.: 16 20 21 85
Swift: JYBA DKKK
Iban No.:DK8072450002003501

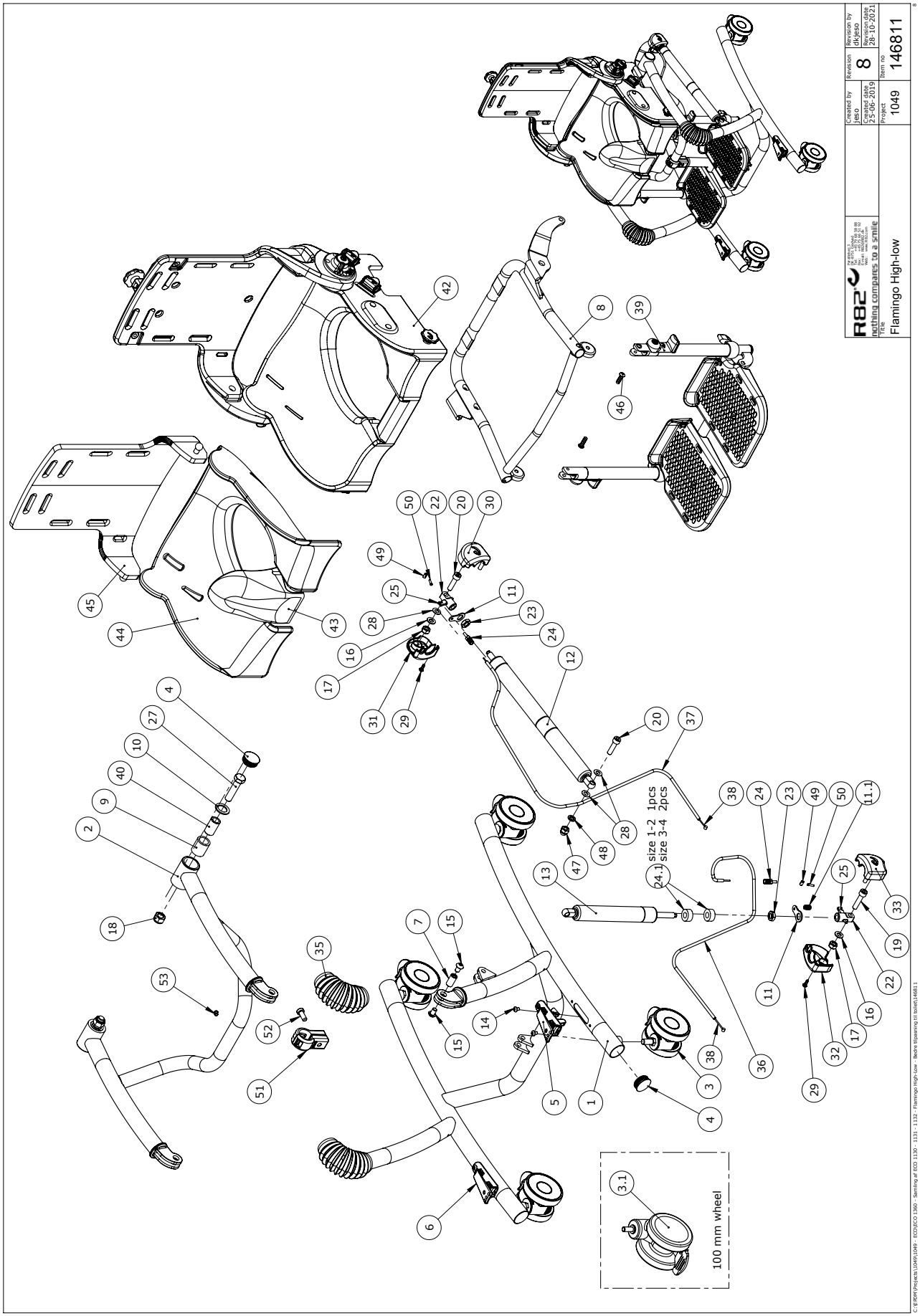

R82 A/S
Parallelvej 3
8751 Gedved
Denmark

Tel: +45 79 68 58 88
Fax: +45 75 66 51 92
E-mail: R82@R82.dk
Web: www.etac.com

Cvr. Nr.: 16 20 21 85
Swift: JYBA DKKK
Iban No.:DK8072450002003501

Position	No.	Description	Quantity	Unit of Measure	Ean code
1*	135994-10	Frame Bottom, size 3+4	PCS	1	5707292877178
	135990-10	Frame Bottom, size 1+2	PCS	1	5707292877161
2*	138539-10	Frame top, size 3+4	PCS	1	5707292893826
	138414-10	Frame top, size 1+2	PCS	1	5707292893802
3*	3006955	100MM DOUBLE WHEEL, WHITE	PCS	4	5707292601872
	3006830	75MM WHITE STEINCO WHEEL	PCS	4	5707292368560
	3006955	100mm double wheel, white	PCS	4	5707292601872
4	2507006	Ferrule for pipe, grey Ø32	PCS	6	5707292580917
5	111869-1	Release pedal complete f. tilt	PCS	1	5707292839596
6	114288-1	Release pedal komplet for lift	PCS	1	5707292839602
7	100236	Bush ø12 x M8 x 22,5	PCS	2	5707292559746
8*	112413-10	Seatframe complete size 4	PCS	1	5707292602817
	112412-10	Seatframe complete size 3	PCS	1	5707292602800
	112411-10	Seatframe complete size 2	PCS	1	5707292602794
	112410-10	Seatframe complete size 1	PCS	1	5710000000000
9	100234	Bearing ø25x18x28	PCS	2	5707292560001
10	100233	Disc ø27x18,2x2	PCS	2	5707292560025
11	82268	Wire mounting by pedal	PCS	2	5707292123039
11.1	0310100	Pressure spring 0,9*8*23*10,5v	PCS	1	5707292135513
12*	2206510	Lockable Gas traction spring	PCS	1	5707292603838
	2206505	Lockable Gas Traction spring	PCS	1	5707292630087
13*	2206160-2	Bloc-o-lift, 174268, 800N	PCS	1	5707292895851
	2206150-2	Bloc-o-lift, 174029, 600N	PCS	1	5707292895844
14	0631952	Button head M5*6, rf tuflok	PCS	4	5707292503725
15	0661153	Button head screw 8*10 stainl.	PCS	4	5707292616654
16	1105080	Stainless washer 8mm	PCS	2	5707292140364
17	1631080	Stainless lock nut 8mm	PCS	2	5707292141453
18	1631120	Stainless lock nut 12mm	PCS	2	5707292502049
19	0609835	Stainless insex screw 8*35	PCS	1	5707292138606
20	0609832	Stainless insex screw 8*30	PCS	2	5707292606037
22	138241	House for gasspring	PCS	2	5707292839923
23	1761005	Counter nut 10*0.1	PCS	2	5707292509925
24	0380001	Adj screw U-BA-BZ-E-SM5-VA	PCS	2	5707292829771
24.1	1310630	Distance piece, Ø10 (size 1 '1 PCS'; Size 2 '2 PCS')	PCS	2	5707292140753
25	2200050	Small release arm	PCS	2	5707292143075
26	2501600	Ferrule d15*1,0 black	PCS	1	5707292143969
27	0607999	Stainless Insex screw 12*50	PCS	2	5707292482013
28	1310645	Washer, nature Ø16*8*0,5mm	PCS	1	5707292446015
29	1810050	Plate screw 7981c st 2,9*13	PCS	2	5707292404671
30	113085	Cover, outside	PCS	1	5707292604279
31	113086	Cover, inside	PCS	1	5707292604262
32	113099	Cover, right	PCS	1	5707292604255
33	113098	Cover, left	PCS	1	5707292604248
35	112354	Bellow for frame/adjust. arm	PCS	2	5707292602039
36*	113783	Outher casing for lift, 3-4	PCS	1	5707292604347
	140634	outher casing f. lift size 1-2	PCS	1	5707290000000
*Choose size/color/type					

37*	109043	Cable seat tilt size 3-4	PCS	1	5707292575593
	140635	Outher casing f.tilt size 1-2	PCS	1	5707290000000
38	0371854-1	Soft inner cable for Stingray	PCS	2	5707292536945
39*	116969-4	Flamingo footrest kompl.size 4	PCS	1	5707292609588
	116969-3	Flamingo footsup,compl. s.3	PCS	1	5707292609571
	116969-2	Flamingo footsup,compl.s 2	PCS	1	5707290000000
	116969-1	Flamingo footsup,complete.s 1	PCS	1	5710000000000
40	100229	Bush	PCS	2	5707292560018
42*	71004	Back&seat, Flamingo size 4	PCS	1	5707292103956
	71003	Back&seat, Flamingo size 3	PCS	1	5707292103949
	71002	Back&seat, Flamingo size 2	PCS	1	5707290000000
	71001	Flamingo size&back sz 1, compl	PCS	1	5710000000000
43*	880192	Splashguard, high, size 2-4	PCS	1	5707292134547
	880191	Splashguard, high, size 1	PCS	1	5710000000000
44*	880164	Upholstery for Seat size 4	PCS	1	5707292134448
	880163	Upholstery Flamingo Seat sz.3	PCS	1	5707292134431
	880162	Upholstery Flamingo Seat sz.2	PCS	1	5707290000000
	880161	Upholstery Flamingo Seat sz.1	PCS	1	5710000000000
45*	880174	Upholstery sz.4,back,flamingo	PCS	1	5707292134486
	880173	Upholstery Flamingo back sz.3	PCS	1	5707292134479
	880172	Upholstery Flamingo back sz.2	PCS	1	5707290000000
	880171	Upholstery Flamingo back sz.1	PCS	1	5710000000000
46	0659555	Button head M6*20, A2 w/ ES-Lo	PCS	2	5707292612120
47	1781080	Stainless top nut 8mm	PCS	1	5707292141576
48	1100500	Spring washer 8mm, stainless	PCS	1	5707292140142
49	0388006	Screwnipple 5*7,5mm	PCS	2	5707292136114
50	0387000	End nipple for outer casing	PCS	1	5707292136091
51	140227	Lock for springstopper	SÆT	1	5707292881328
52	0603533	Insex M8x20, lav hoved RF	PCS	1	5707292575296
53	0506509	Rivet 4*10, stainless	PCS	1	5707292472441
54	1310645	Washer, nature Ø16*8*0,5 mm	PCS	2	5707292446015
*Choose size/color/type					

R82 A/S
Parallelvej 3
8751 Gedved
Denmark

Tel: +45 79 68 58 88
Fax: +45 75 66 51 92
E-mail: R82@R82.dk
Web: www.etac.com

Cvr. Nr.: 16 20 21 85
Swift: JYBA DKKK
Iban No.:DK8072450002003501

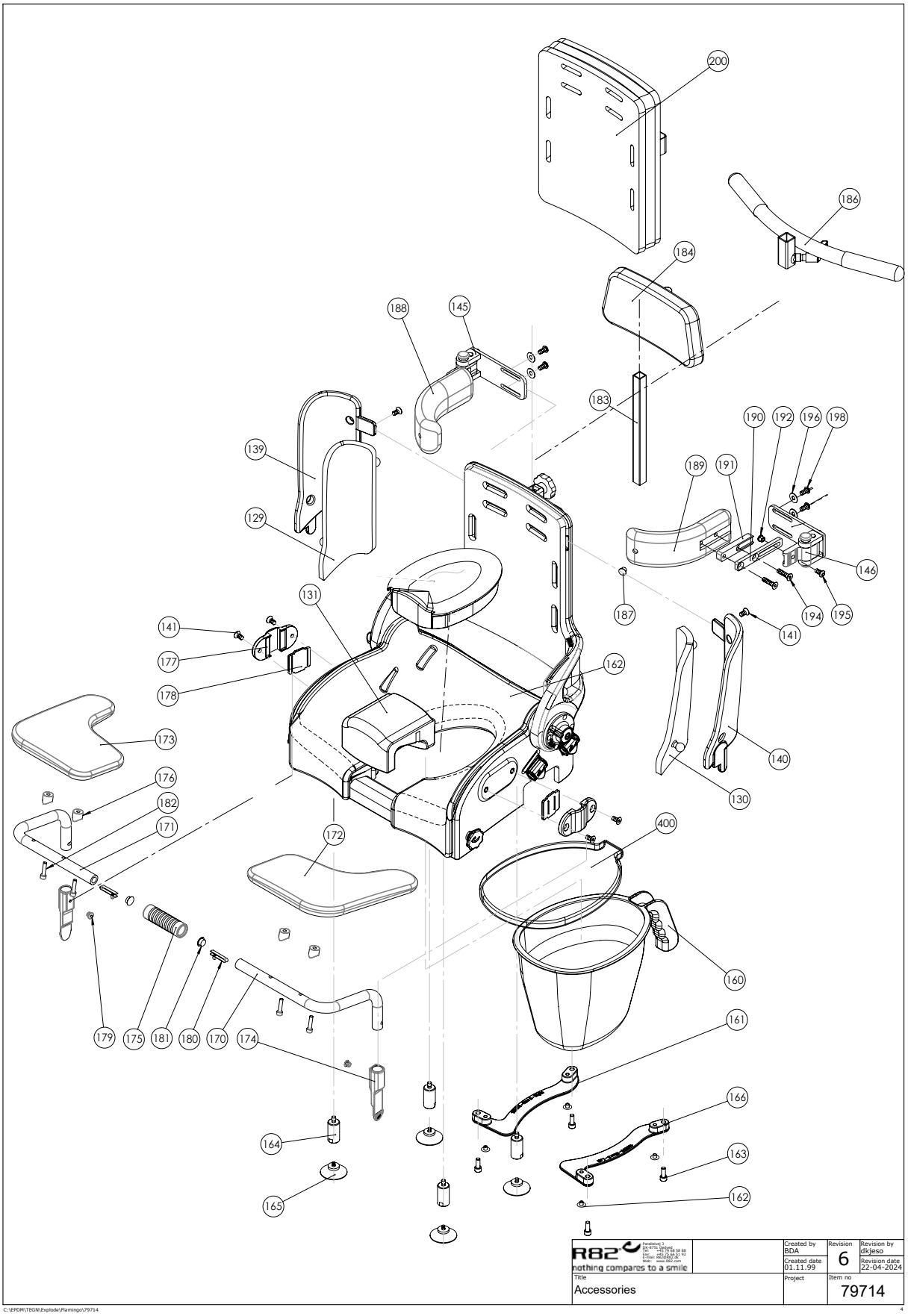
200
186
184
188
145
183
190
192
196
198
139
189
191
129
146
131
187
194
195
141
141
177
162
178
173
140
176
130
182
171
172
400
160
179
175
181
180
170
174
161
166
164
163
165
162
R82
nothing compares to a smile
Created by
BDA
Revision
6
Revision by
dkjeso
Created date
01.11.99
Revision date
22-04-2024
Title
Accessories
Project
Item no
79714
C:\EPDM\TEGN\Explode\Flamingo\79714
4

Position	No.	Description	Quantity	Unit of Measure	Ean code
129*	880181-H	Upholst. F/right side,flam 1	1	PCS	5707292254467
	880181-61H	Side upholstery, sz.1, right	1	PCS	5707292615893
	880182-H	Upholst. F/right side, flam. 2	1	PCS	5707292254481
	880182-61H	Side upholstery, sz.2, right	1	PCS	5707292615916
	880183-H	Upholst. F/right side,flam. 3	1	PCS	5707292254504
	880183-61H	Side upholstery, sz.3, right	1	PCS	5707292615930
	880184-H	Upholst. F/right side,flam. 4	1	PCS	5707292254528
	880184-61H	Side upholstery, sz.4, right	1	PCS	5707292615954
130*	880181-V	Upholst.f/left side flam. Sz.1	1	PCS	5707292254474
	880181-61V	Side upholstery, sz.1, left	1	PCS	5707292615909
	880182-V	Upholst. F/left side, flam. 2	1	PCS	5707292254498
	880182-61V	Side upholstery, sz.2, left	1	PCS	5707292615923
	880183-V	Upholst. F/left side, flam. 3	1	PCS	5707292254511
	880183-61V	Side upholstery, sz.3, left	1	PCS	5707292615947
	880184-V	Upholst f/left side,flam. 4	1	PCS	5707292254535
	880184-61V	Side upholstery, sz.4, left	1	PCS	5707292615961
139*	71322	Backside size 1,right-Flamingo	1	PCS	5707292105066
	71323	Backside size 2,right-Flamingo	1	PCS	5707292105073
	71324	Backside size 3,right-Flamingo	1	PCS	5707292105080
	71325	Backside size 4,right-Flamingo	1	PCS	5707292105097
140*	71332	Backside size 1, left-Flamingo	1	PCS	5707292105103
	71333	Backside size 2, left-Flamingo	1	PCS	5707292105110
	71334	Backside size 3, left,flamingo	1	PCS	5707292105127
	71335	Backside size 4, left-Flamingo	1	PCS	5707292105134
141	0609727	Stainless insex 6x12 uh	2	PCS	5707292138484
145*	5982560-R	Sidesupport 118*42,5mm, right	1	PCS	5707292396082
	5982580-R	Svingbar sidestøtte højre	1	PCS	5707292396105
146*	5982560-L	Sidesupport 118*42,5mm, left	1	PCS	5707292396020
	5982580-L	Svingbar sidestøtte venstre	1	PCS	5707292396044
160*	880128	Comode pan, Flamingo size 1+2	1	PCS	5707292134301
	880129	Comode pan, Flamingo size 3+4	1	PCS	5707292134318
161*	135470	Pottebøjle str.2, højre	1	PCS	5707292893680
	136218	Pottebøjle str.1, højre	1	PCS	5707292893659
	135544	Pottebøjle str.3, højre	1	PCS	5707292893697
162	1310536	Covering button,white 13*5,0mm	4	PCS	5707292397911
163	0602206	Insex M6*16 rustfri m/ nylon	4	PCS	5707292896629
164	71134	Distancepart for suction cup	4	PCS	5707292104397
165	2522015	Suction cup Ø80mm M6*12mm	4	PCS	5707292144461
166*	138575	Flaminco str. 2 - ABS	1	PCS	5707292893673
	136237	Pottebøjle str.1, venstre	1	PCS	5707292893666
	135538	Pottebøjle str.3, venstre	1	PCS	5707292873040
170*	71371	Supporting tube 1 left	1	PCS	5707292105394
	71373	Support rod for size 2	1	PCS	5707292105417
	71367	Supporting tube 3 left	1	PCS	5707292436771
	71369	Support rod size 4, left	1	PCS	5707292436757
171*	71370	Supporting tube 1 right	1	PCS	5707292105387
	71372	Supporting tube 2 right	1	PCS	5707292105400
	71366	Supporting tube 3 right	1	PCS	5707292436764
	71368	Support rod size 4, right	1	PCS	5707292436740
* choose size/color					

R82 A/S
Parallelvej 3
8751 Gedved
Denmark

Tel: +45 79 68 58 88
Fax: +45 75 66 51 92
E-mail: R82@R82.dk
Web: www.etac.com

Cvr. Nr.: 16 20 21 85
Swift: JYBA DKKK
Iban No.:DK8072450002003501

Position	No.	Description	Quantity	Unit of Measure	Ean code
172*	6175361	Armsupport tray small, left	1	PCS	5707292189707
	6075361	Arm rest table small, left PUR	1	PCS	5707292613103
	6175361	Armsupport tray small, left	1	PCS	5707292189707
	6175365	Armsupport tray large, left	1	PCS	5707292189721
	6075365	Arm rest left, big - Hell Blau	1	PCS	5707292613066
173*	6175359	Armsupport tray small,right	1	PCS	5707292189691
	6075359	Arm rest table small,right PUR	1	PCS	5707292613110
	6175363	Armsupport tray large, right	1	PCS	5707292189714
	6075363	Arm rest right, big - Hellblau	1	PCS	5707292613073
174	71130-90	Bushing, white	2	PCS	5707292223593
175	71132	Locking socket,white	1	PCS	5707292104373
176	104377	Saddle disc Ø15,5Ø5,3, h10,0	4	PCS	5707292568878
177	72134-90	Mounting for armrest, white	2	PCS	5707292223760
178	82408-90	Underlaying plate armrest flam	2	PCS	5707292231482
179	0506519	Stainless blind rivet 4*12	2	PCS	5707292137388
180	6153700	Knob spring f.activity centre	2	PCS	5707292188601
181	1310552	Hedge plug k 5 natural	2	PCS	5707292581747
182	0603522	Insex ch M5*22 stainless	4	PCS	5707292490988
183	108407	Tube for back extension	1	PCS	5707292573452
184*	880118	Back extension, grey PU, sz. 1+2	N/A	N/A	5707292572936
	880119	Back extension, grey PU, sz. 3+4	N/A	N/A	5707292572943
186	880110	Push brace for flamingo/swan	1	PCS	5707292134219
187	2502519	Tube leg, grey, Ø16mm	2	PCS	5707292394415
188+189*	6075407	Side cushion, large, curved, lightblue	2	PCS	5707292613332
	6175407	Side cushion, large, curved	2	PCS	5707292389237
	6175409	Side cushion, small, curved	2	PCS	5707292389251
	6075408	Side cushion, medium, curved, lightblue	2	PCS	5707292613349
	6175408	Side cushion, medium, curved, grey	2	PCS	5707292389244
	6075409	Side cushion, small, curved, light blue	2	PCS	5707292613356
	6175403	Side cushion moon shaped	2	PCS	5707292381132
	6175402	Side cushion, square	2	PCS	5707292381125
	6175401	Side cushion, long, straight	2	PCS	5707292381118
190*	82569	Bar,straight,stainless, 9,5cm	2	PCS	5707292124869
	82648	Bar, straight,stainless,16cm	2	PCS	5707292389275
	81968	Bar, curved, 25 mm, l:12 cm	2	PCS	5707292120366
191	82570	Plastic spacer for Flamingo	2	PCS	5707292124876
192	82558	Nut 6x16	2	PCS	5707292124753
194*	0609730	Stainless insex 6*20 uh.	4	PCS	5707292138507
	0609727	Stainless insex 6x12 uh	4	PCS	5707292138484
195	0659200	Buttonhead screw M6*12 stainl.	2	PCS	5707292139436
196+198	5001009	Screws etc. For side supports	1	PCS	5707292154330
200	80172-44	Seat depth reduction kit, s. 2	N/A	N/A	5707292992895
	80173-44	Seat depth reduction kit, s. 3	N/A	N/A	5707292992901
	80174-44	Seat depth reduction kit, s. 4	N/A	N/A	5707292992918
400*	137341	Lay for pot 1	1	PCS	5707292837240
	137345	Lay for pot 2	1	PCS	5707292837226
* choose size/color					

R82 A/S
Parallelvej 3
8751 Gedved
Denmark

Tel: +45 79 68 58 88
Fax: +45 75 66 51 92
E-mail: R82@R82.dk
Web: www.etac.com

Cvr. Nr.: 16 20 21 85
Swift: JYBA DKKK
Iban No.:DK8072450002003501

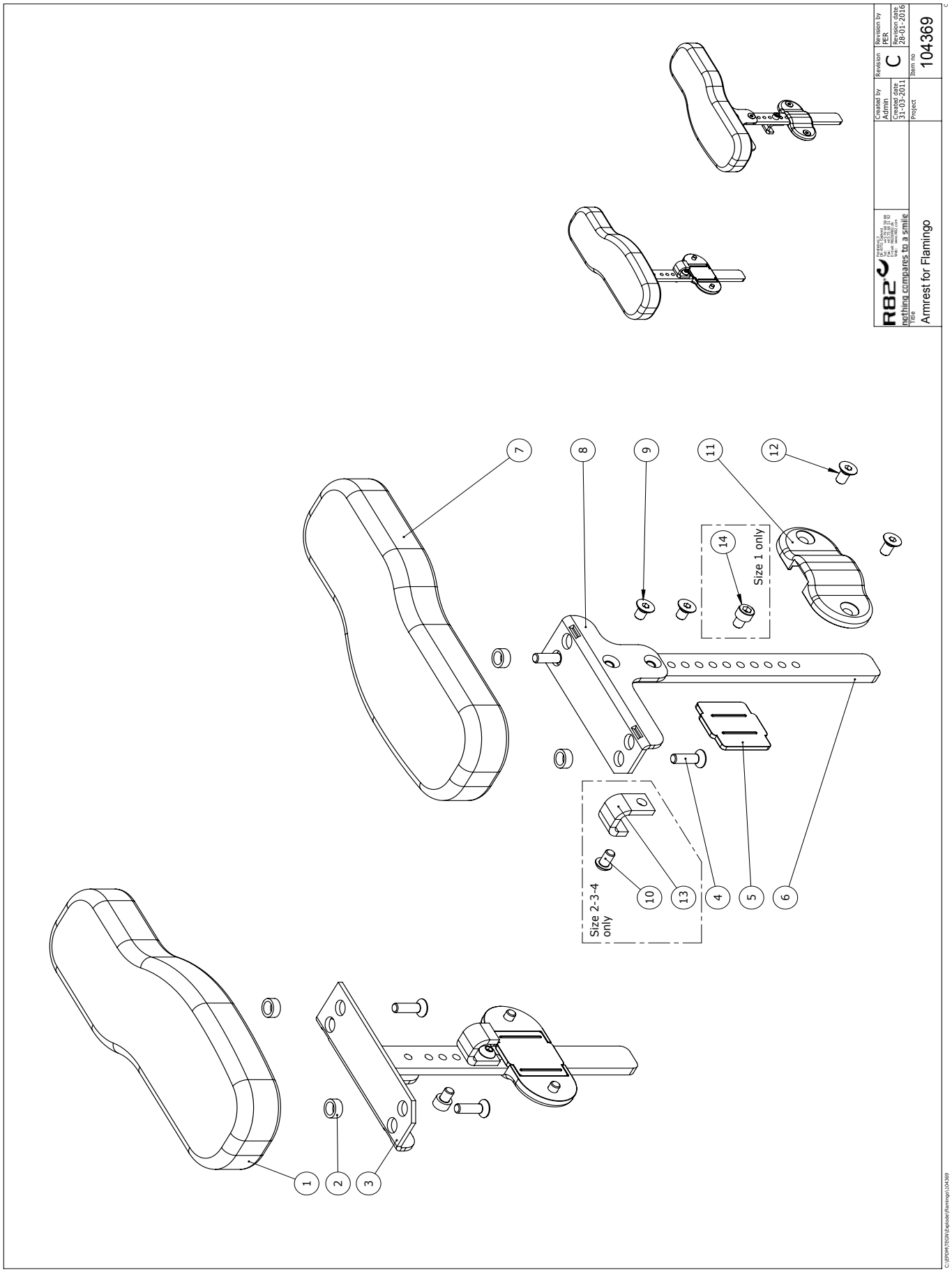
Created by
Admin
Created date
31-03-2011
Revision
C
Revision by
PER
Revision date
28-01-2016
Item no
104369
Project
R82
nothing compares to a smile
Title
Armrest for Flamingo
Size 1 only
Size 2-3-4 only
1
2
3
4
5
6
7
8
9
10
11
12
13
14

Position	Art. No.	Description	Unit of Measure	Quantity	Ean code
1	6175150	Armrest cushion, size 1, right	PCS	1	5707292189226
2	1310539	Distance piece 12/8,4*5mm	PCS	4	5707292423474
3	104360	Armrest bracket, right	PCS	1	5707292570703
4	0609730	Stainless insex 6*20 uh.	PCS	4	5707292138507
6	117054	Amrest bar	PCS	2	5707292611383
7	6175152	Armrest cushion, size 1, left	PCS	1	5707292189233
8	104359	Armrest bracket, left	PCS	1	5707292570697
9	0609760	Rustfri insex 6*10 uh. tuflok	PCS	4	5707292570796
10	0659005	Insex button head M6*10,stainl	PCS	2	5707292423740
13	117055	Brace	PCS	2	5707292611390
14	0602479	Insex M6*8, stainless	PCS	2	5707292465412
5+11+12	5001013	Plastic bag enclosing small	SET	1	5707292154378

R82 A/S
Parallelvej 3
8751 Gedved
Denmark

Tel: +45 79 68 58 88
Fax: +45 75 66 51 92
E-mail: R82@R82.dk
Web: www.etac.com

Cvr. Nr.: 16 20 21 85
Swift: JYBA DKKK
Iban No.:DK8072450002003501

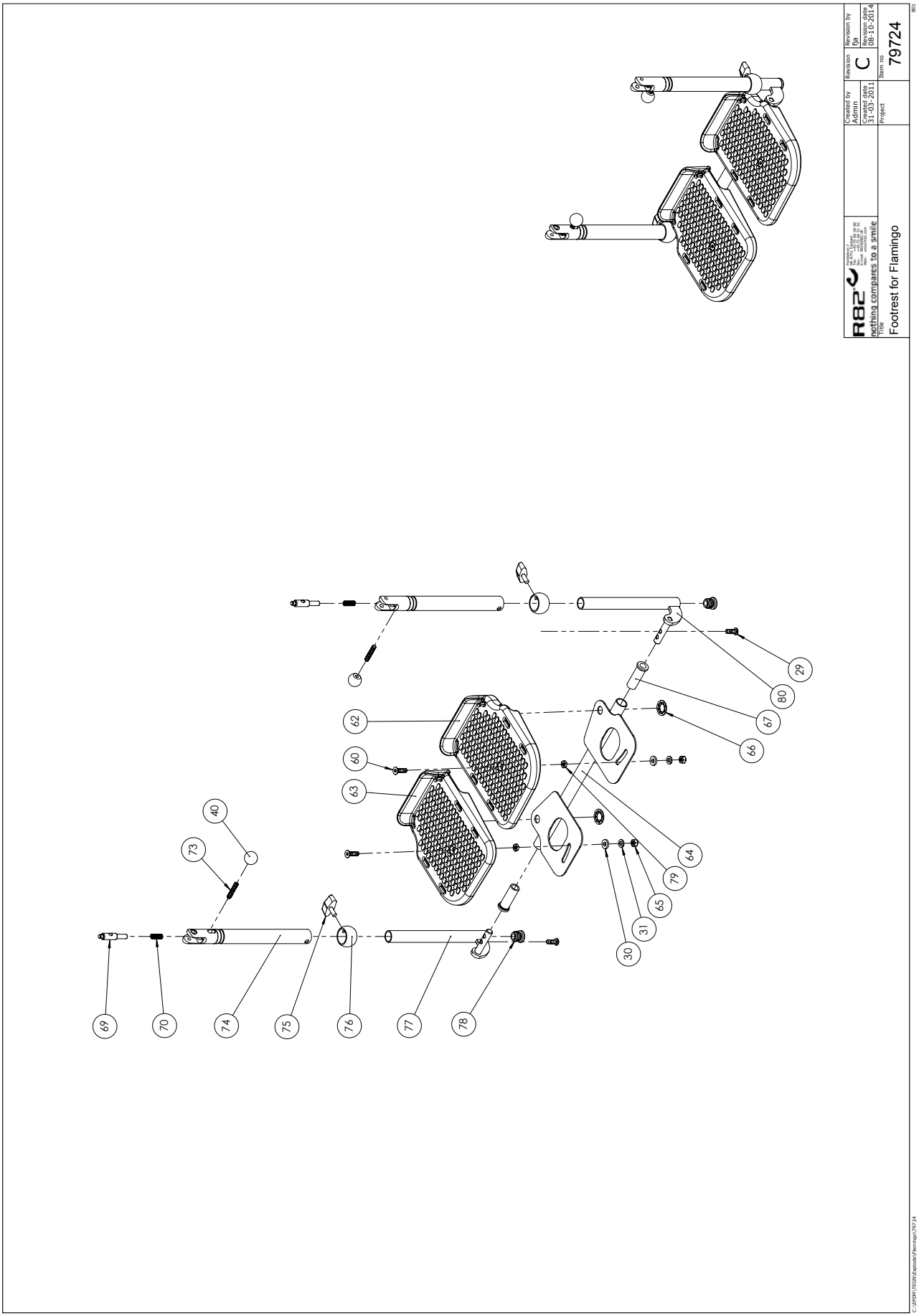

Parallelvej 3
8751 Gedved
Denmark

Fax: +45 75 66 51 92
E-mail: R82@R82.dk
Web: www.etac.com

Swift: JYBA DKKK
Iban No.:DK8072450002003501

Position	No.	Description	Quantity	Unit of Measure	Ean code
30	1310717	NYLON WASHER, NAT O17-8,4*2MM	2	PCS	5707292140821
40	3502008	KNOB HANDLE Ø20 M6	2	PCS	5707292146830
60	0609732	INSEX 6*22, STAINLESS	2	PCS	5707292409669
62*	71207	FOOTPLATE LEFT, FLAM. SZ 1-2	1	PCS	5707292104625
	71209	FOOTPLATE LEFT, FLAM. SZ 3-4	1	PCS	5707292104649
63*	71208	FOOTPLATE RIGHT, FLAM. SZ 1-2	1	PCS	5707292104632
	71210	FOOTPLATE RIGHT, FLAM. SZ 3-4	1	PCS	5707292104656
64*	71282	FOOTPLATE INLAY FLAM. SIZE 1	1	PCS	5707292104816
	71283	FOOTPLATE INLAY FLAM. SIZE 2	1	PCS	5707292104823
	71284	FOOTPLATE INLAY FLAM. SIZE 3	1	PCS	5707292104830
	71285	FOOTPLATE INLAY FLAM. SIZE 4	1	PCS	5707292104847
65	1631060	STAINLESS LOCK NUT 6MM	2	PCS	5707292141446
66	1109000	STARLOCK SKIVE M12, U/KAP, RF.	2	PCS	5707292140432
67	71119	FICTIONBUSH FOR FLAMINGO	2	PCS	5707292104267
69	71123	LOCK RATCHET	2	PCS	5707292104304
70	0310147	STAINLESS SPRING1*9,3*20MM*7,5	2	PCS	5707292135636
73	0806030	STAINLESS STOP SCREW 6*30MM	2	PCS	5707292140029
74*	71242	TELESCOPIC PIPE SZ. 1	2	PCS	5707292104687
	71243	TELESCOPIC PIPE SZ. 2-4	2	PCS	5707292104694
75	3503210	FINGER SCREW,WHITE M6X6	2	PCS	5707292147004
76	71118	BUSHING Ø22-18 FLAM.	2	PCS	5707292104250
77*	71272	TELESCOPE EXTENSION LEFT, SZ 1	1	PCS	5707292104755
	71273	TELESCOPE ARM LEFT 2	1	PCS	5707292104762
	71274	TELESCOPE EXT. LEFT, SZ 3+4	1	PCS	5707292104779
78	2502005	FERRULE D18*1,0-2,0 INT.WHITE	2	PCS	5707292144010
79	1750600	LOCK NUT, STAINLESS M6	2	PCS	5707292141477
80*	71277	TELESCOPE EXTENSION RIGHT	1	PCS	5707292104786
	71278	TELESCOPE EXTENSION RIGHT,SZ 2	1	PCS	5707292104793
	71279	TELESCOPE EXTENSION RIGHT,SZ3	1	PCS	5707292104809
*Choose size/color/type					

R82 A/S
Parallelvej 3
8751 Gedved
Denmark

Tel: +45 79 68 58 88
Fax: +45 75 66 51 92
E-mail: R82@R82.dk
Web: www.etac.com

Cvr. Nr.: 16 20 21 85
Swift: JYBA DKKK
Iban No.:DK8072450002003501

Pos no.	Qty.	Item no.	Description.
145	1	5982560-R	Svingbar sidestøtte højre
146	1	5982560-L	Svingbar sidestøtte venstre
187	2	2502519	DÆKHÆTTE Spec
189	2	6175408	Sidepelot mellem buet grå
190	2	155641	Bar, curved, 25 mm, l:10,5 cm
191	2	82570	Mellemlæg svb.sidest.flam.hvid
192	2	82558	M6 møtrik
194	4	0609730	INSEX UNDERS. M6x20
195	2	0659200	BUTTON HEAD M6x12
196	4	1105060	Rustfri skive 6,4*12*1,6 (a4)
198	4	0659200	Button head M6*12, rustfri

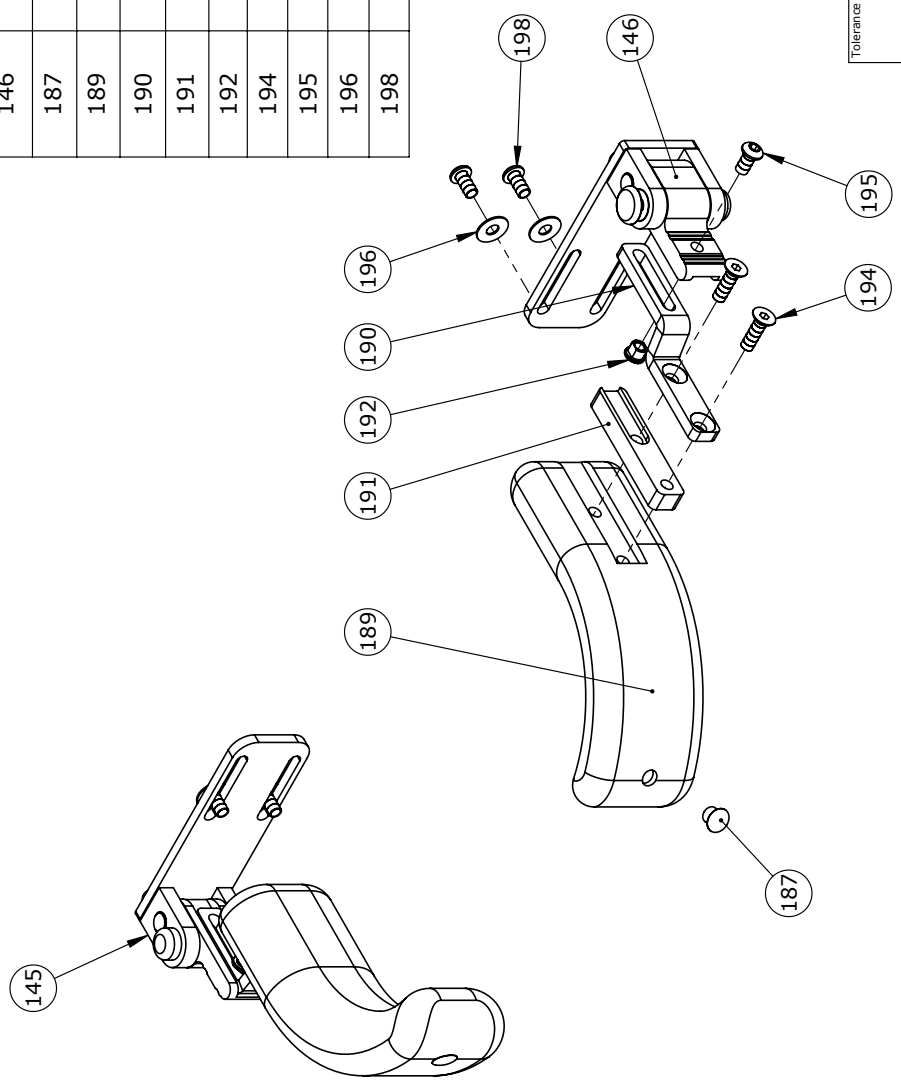

Tolerance	Project	R82 nothing compares to a smile	Parallelvej 3 8751 Gedved Tel: +45 79 68 58 88 Fax: +45 75 66 51 92 E-mail: R82@R82.dk Web: www.R82.com
Surface	Tool 117241	Created by PER / Revision 4	Revision by PER
		Created date 11-02-2021	Revision date 08-04-2021
Material		Scale 1:3	Weight 425.299g
Title Side Support Swing away Flamingo		Format A4	Item no 155650

C:\EPDM\TEGN\Explode\Flamingo\155650