Manual wheelchairs

Spareparts list english

1a22091.2 2026-11-23



Etac Cross 6



Etac Cross 5



Etac Cross 5 XL



Etac Prio



Etac Transit



Etac Xact



Etac Crissy Swing-Away



Etac Crissy Active

Index

Index	Page
Frame parts	
Side frame	3
Frame (rigid)	4
Cross frame Cross 6, Cross 5/5XL, Crissy	5
Seat frame Prio	6
Actuator, electric recline function Prio	7
Back support frame 3A and Prio (lower part)	8
Back support frame 3A and Prio (upper part)	9
Back support tubes for separate back support, ECS (Crossback 2), Crissy	10
Fixed back support with fixed push handles	11
Back support 2B	12
Configurable parts	
Anti tippers	13-14
Arm supports	15-19
Attachment, chest harness	20
Attendant brakes, fixed back support with fixed push handles	21
Back angle control	22
Back extension 3A	23
Back support cover Cross back mod. 2	24
Back support cover Cross back 3A	25-26
Back support cover Cross back 2B	27
Back support cushion	28
Back support upholstery Cross back mod. 2	29
Back support upholstery Cross back 3A	30
Back support upholstery Cross back 2B	31
Back support upholstery fixed back	32
Back support upholstery Prio	33
Basket for oxygene tank	34
Castor	35-36
Crossbar back	37
Crutch and cane holder	38
Foot support	39-41
Foot support one piece	42
Handrims	43-44
Head supports	45
IV stand	46
Leg abduction	47
Leg supports	48-49
Leg support, amputee	50
Leg support elevating mod 1	51
Leg support elevating mod 3	52
Leg support, plaster	53
One arm drive	54
Positioning belt	55
Push handles 3A, bow handles	56-57
Rear wheel	58
Rear wheel with attendant brake	59-60
Seat cushion	61
Seat upholstery/Seat extension Cross back 3A	62
Sideguard	63
Solid seats	64
Spokeguards	65
Tetra quick release adapter	66
Thigh support	67
Tray	68
Tray Hemi	69
Tray Hemi, foldable	70
Trunk support Cross back 3A	71-73
Tyre and innertube	74-75
User brakes	76-77
User operated self-tilt	78
Widening kit	79

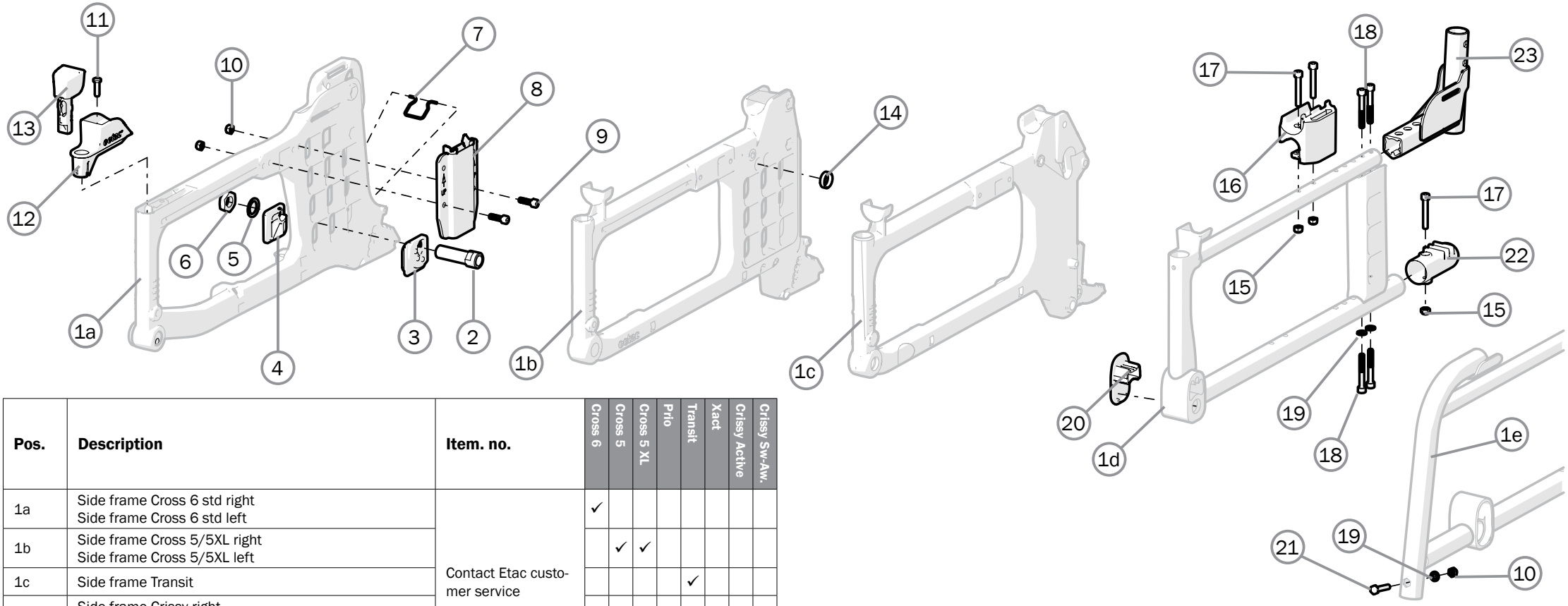

Pos.	Description	Item. no.	Cross 6	Cross 5	Cross 5 XL	Prio	Transit	Xact	Crissy Active	Crissy Sw-Aw.
1a	Side frame Cross 6 std right Side frame Cross 6 std left	Contact Etac customer service	✓							
1b	Side frame Cross 5/5XL right Side frame Cross 5/5XL left			✓	✓					
1c	Side frame Transit						✓			
1d	Side frame Crissy right Side frame Crissy left									✓
1e	Side frame Crissy Active right Side frame Crissy Active left								✓	
2	Axle sleeve M100 D12	20537	✓	✓	✓				✓	✓
	Axle sleeve for axle D12,7x110	83893	✓							
3	Camber washer outer 2° Camber washer outer 0°	82567 82569	✓	✓	✓				✓	✓
4	Camber washer inner 2° Camber washer inner 0°	82568 82570	✓	✓	✓				✓	✓
5	Schnorr washer 17x24x1.3 zink plated	13084	✓	✓	✓				✓	✓
6	Nut M16x 1 NV 24 B8	12052	✓	✓	✓				✓	✓
7	Wire attachment anti-tip	83412	✓	✓	✓					
8	Attachment arm support compl	25535	✓	✓	✓		✓			
9	Screw M6x20 MC6S 8.8 black	11392	✓	✓	✓		✓			
10	Locking nut M6	12035	✓	✓	✓		✓		✓	
11	Screw M6x20 MRT-GF steel TX	11703	✓							
11-12	Support seat tube Cross 6 cpl ri/le	28615	✓							
13	Cover legrest attachment	51213	✓							

Pos.	Description	Item. no.	Cross 6	Cross 5	Cross 5 XL	Prio	Transit	Xact	Crissy Active	Crissy Sw-Aw.
14	Spacer low chair rear wheel	82588		✓	✓					
15	Locking nut M6 zink plated DIN 985-6	12017							✓	✓
16	Arm support attachment black	51219							✓	✓
17	Skruv M6x 40 MC6S 10.9 fzb	11229							✓	✓
18	Screw M6x 45 MC6S 12.9 black	11231							✓	✓
19	Washer 6.5x12x1.5	13030							✓	
20	Cover front fork attachment	51184								✓
21	Screw M6x 30 M6S 8.8	11555							✓	
22	Tilter black	51159							✓	✓
23	Adapter back Crissy 2B right	28431-01-1							✓	✓
	Adapter back Crissy 2B left	28431-01-2							✓	✓
24	Touch up paint	80517-xx	✓	✓	✓	✓	✓	✓	✓	✓

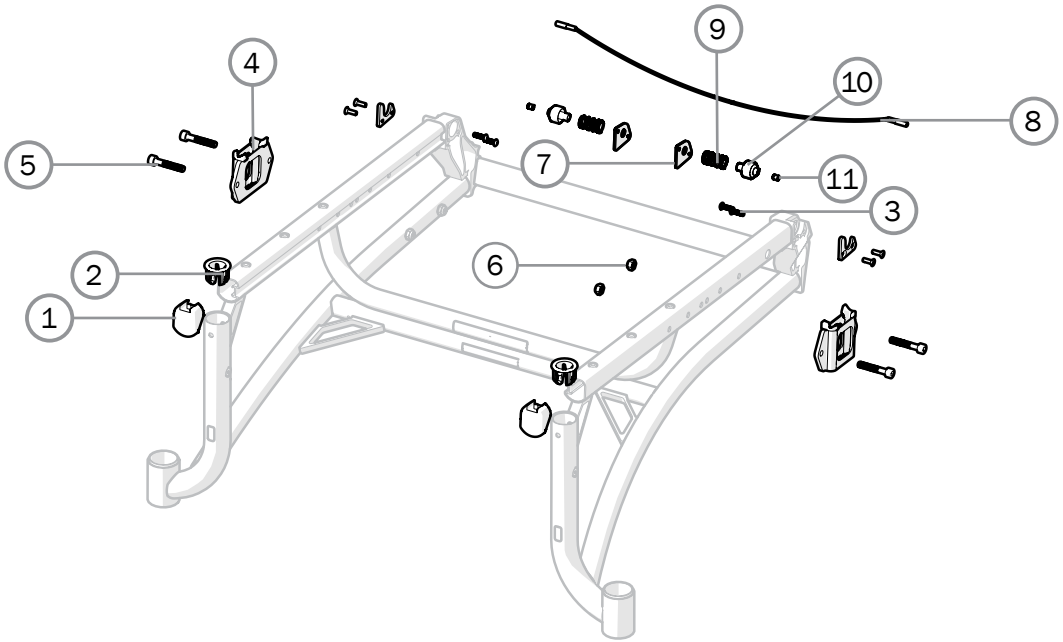

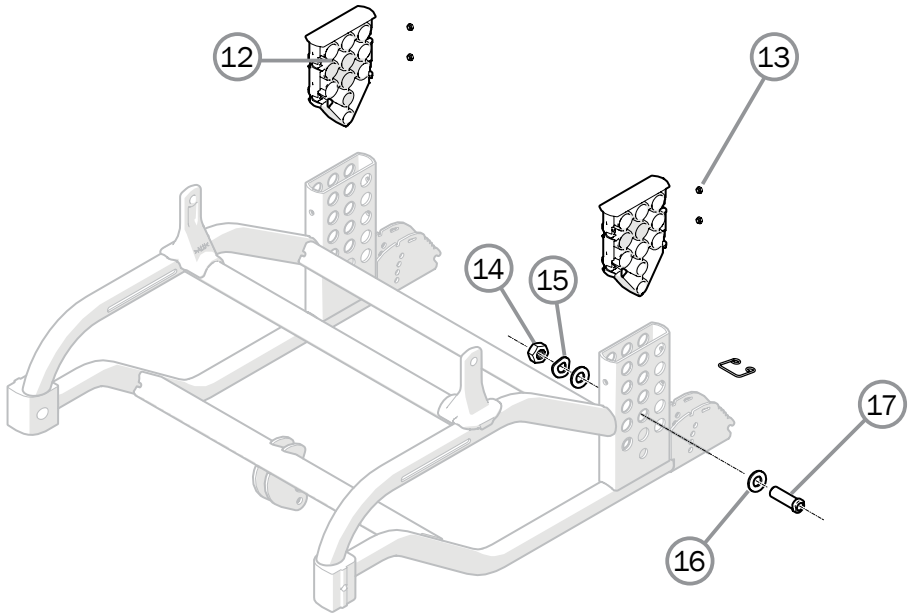

Pos.	Description	Item. no.	Cross 6	Cross 5	Cross 5 XL	Prio	Transit	Xact	Crissy Active	Crissy Sw-Aw.
1	End cap seat tube	51281						✓		
2	Bushing leg support	51273						✓		
3	Screw M4x14 K6S 10.9 Fe Zn8 P4	11724						✓		
4	Arm support attachment H48 cpl	28859						✓		
5	Screw M6x35 MC6S black	11533						✓		
6	Locking nut M6 Zn8/P4 DIN 985-6	12035						✓		
7	Cover rear part inside	83929						✓		
8	Wire back folding 35 cm	83501						✓		
	Wire back folding 37,5 cm	83502						✓		
	Wire back folding 40 cm	83503						✓		
	Wire back folding 42,5 cm	83504						✓		
	Wire back folding 45 cm	83505						✓		
	Wire back folding 47,5 cm	83506						✓		
	Wire back folding 50 cm	83507						✓		
9	Spring D13,5 L24	83500						✓		
10	Lock back folding	83923						✓		
11	Stop screw M5x5 SK6SS A2	11530						✓		
8-11	Wire kit 35 cm	249630						✓		
	Wire kit 37,5 cm	249640						✓		
	Wire kit 40 cm	249660						✓		
	Wire kit 42,5 cm	249670						✓		
	Wire kit 45 cm	249680						✓		
	Wire kit 47,5 cm	249690						✓		
	Wire kit 50 cm	249700						✓		
12	Cover rear wheel attachm Prio					✓				
13	Square nut high M6					✓				
14	Nut M16x 1 NV 24 B8	12052				✓				
15	Locking washer AZ 5/8	13039				✓				
16	BRB 17x30x3 Washer	13117				✓				
17	Axle sleeve D12	20537				✓				
18	Axle sleeve for axle D12,7x110	83893				✓				
	Spring anti-tip	83142				✓				
19	Touch up paint	80517-01				✓				

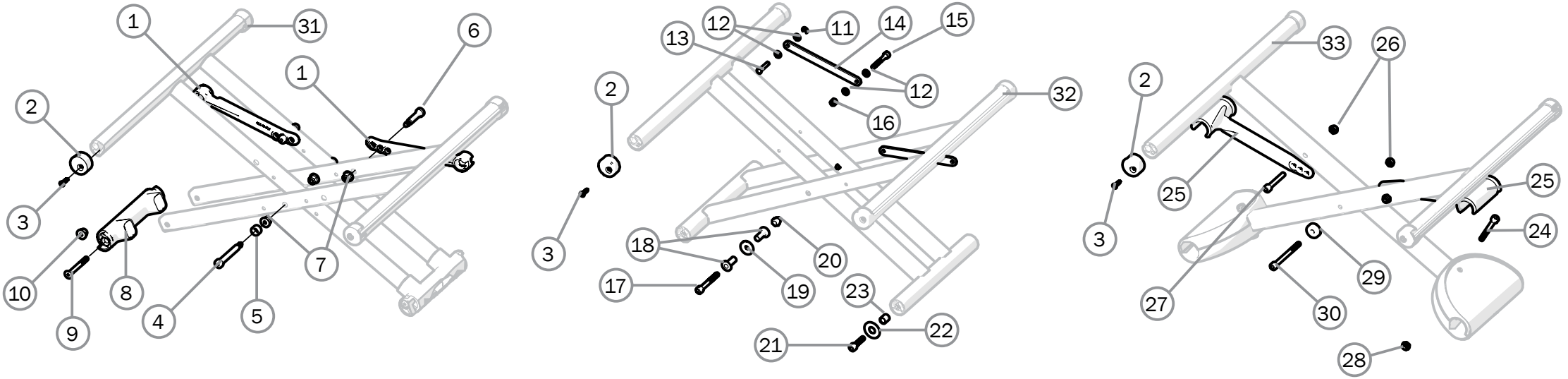

Pos.	Description	Item. No.	Cross 6	Cross 5	Cross 5 XL	Prio	Transit	Xact	Crissy Active	Crissy Sw-Aw.
1	Crosslink 35-40 cm	51186	✓							
	Crosslink 42.5-47.5 cm	51187	✓							
	Crosslink 50-52.5 cm	51188	✓							
2	Plug seat tube D-profile	51189	✓							
	Plug seat tube Cross/M100	50406		✓	✓		✓		✓	✓
3	Screw B8x16FXS black	11401	✓	✓	✓		✓		✓	✓
4	Axle bolt Cross	83248	✓							
5	Spacer 13/8.2/8	51192	✓							
6	Axle bolt Crosslink	83249	✓							
7	Locking nut M6 DIN 6926	12169	✓							
8	Attachment cross short	51190	✓							
	Attachment cross long	51191	✓							
9	Skruv M 6x 50 MF6S FZB 10.9	11447	✓							
10	Låsmutter M6 DIN 6926 fzb	12169	✓							
11	Circlip RSM 4 stainless	13054		✓	✓		✓			
12	Joint bushing	50285		✓	✓		✓			
13	Axle plate cross frame mod 3	20507		✓	✓		✓			
14	Plate cross frame 35 cm (14")	25148		✓			✓			
	Plate cross frame 37,5 cm (15")	25149		✓						
	Plate cross frame 40 cm (16")	25150		✓			✓			
	Plate cross frame 42,5 cm (17")	25151		✓						
	Plate cross frame 45 cm (18")	25152		✓			✓			
	Plate cross frame 47,5 cm (19")	25725		✓	✓					
	Plate cross frame 50 cm (20")	25451		✓	✓		✓			

Pos.	Description	Item. No.	Cross 6	Cross 5	Cross 5 XL	Prio	Transit	Xact	Crissy Active	Crissy Sw-Aw.
14	Plate cross frame 52,5 cm (21")	26035			✓					
	Plate cross frame 55 cm (22")	26036			✓		✓			
	Plate cross frame 57,5 cm (23")	26037			✓					
	Plate cross frame 60 cm (24")	26899			✓					
15	Screw M5x35 MC6S zink plated	11290		✓	✓		✓			
16	Locking nut M5	12036		✓	✓					
17	Screw M6x55 MC6S 12.9	11351		✓	✓		✓			
18	Cross brace washer	20383		✓	✓		✓			
19	Washer D20 d6,4 t=3,5	51028		✓	✓		✓			
20	Domed nut M6 black	12005		✓	✓		✓			
21	Screw M6x25 MC6S black esloc 8.8 DIN 912	11636		✓	✓		✓			
22	Washer 25/10/1.5 black pa	50281		✓	✓		✓			
23	Joint cross frame	20322		✓	✓		✓			
24	Screw M6x45 MC6S 10.9 black	11231							✓	✓
25	Plate cross frame 37.5-42.5 cm black Plate cross frame 45-50 cm black	51160 51161							✓	✓
26	Locking nut M6 DIN 985-6 zink plated	12017							✓	✓
27	Screw M6x40 MC6S 10.9 zink plated	11229							✓	✓
28	Locking nut M6 DIN 985-6 black	12035							✓	✓
29	Spacer plastic cross frame	50483							✓	✓
30	Screw M6x65 MC6S 10.9 zink plated	11236							✓	✓
31	Cross frame Cross 6	Contact Etac customer service	✓				✓			
32	Cross frame Cross 5/5XL/Transit			✓	✓		✓			
33	Cross frame Crissy Active/Crissy Swing-Away								✓	✓

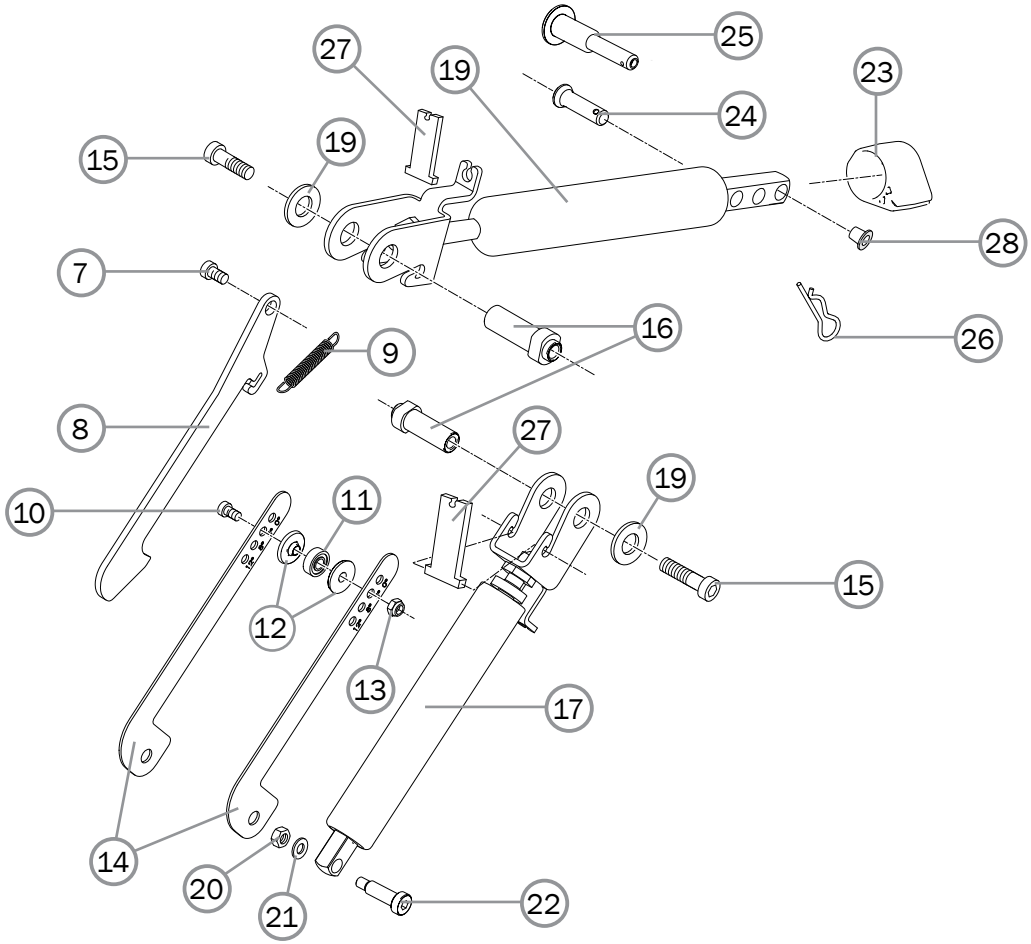

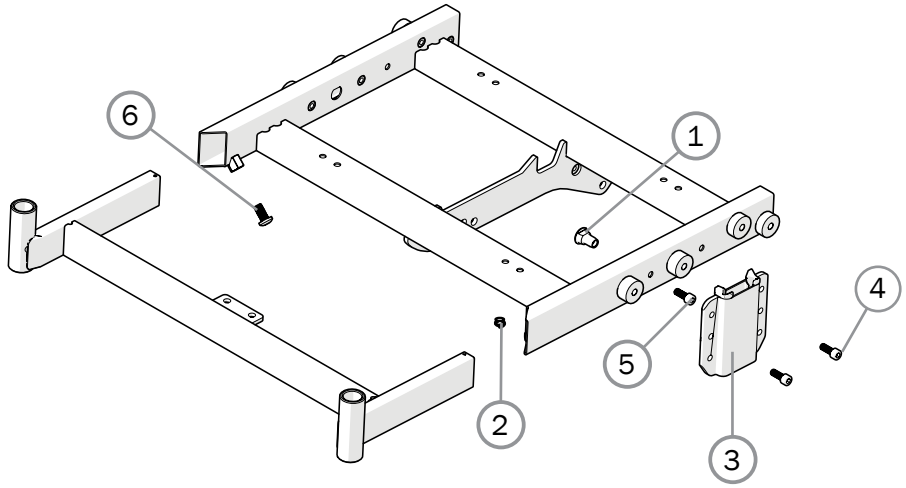

Pos.	Description	Item. no.	Cross 6	Cross 5	Cross 5 XL	Prio	Transit	Xact	Crissy Active	Crissy Sw-Aw.
1	Joint nut seat frame	12117				✓				
2	Wire attachment	50893				✓				
3	Attachment armrest Prio	28514	✓	✓	✓	✓				
4	Screw M6x16 MC6S 12.9	11253				✓				
5	Screw M6x14 MC6LS SW5 Zn8/P4	11700				✓				
6	Screw M8x16 K6S A2	11014				✓				
7	Screw M6x16 MC6S 12.9	11253				✓				
8	Comfort lock	82667				✓				
9	Spring	82690				✓				
10	Screw M5x16	11424				✓				
11	Bearings Dy15 Di6 t5 (NOMO 696	82660				✓				
12	Bearing bushing comfort lock K	20509				✓				
13	Locking nut M 5	12003				✓				
14	Adjustment plate comfort lock	82691				✓				
15	Screw M8x20 K6S 10.9 zink plated	11704				✓				
16	Joint sleeve key socket gas pi	20511				✓				
17	Gas spring cpl	24581				✓				
18	Gas spring 3A cpl	24582				✓				
19	Washer 25/12/1.5 black pa	51169				✓				
20	Locking nut M6	12017				✓				
21	Washer BRB 6x3x10x1.5 fzb	13080				✓				
22	Screw 12.9 8xM6x21.5 Prio	20513				✓				
23	Pull mechanism active backrest plastic Prio	51042				✓				
24	Bolt D8 L23.3	83003				✓				
25	Locking pin QR	83159				✓				
26	Locking pin R t2	83037				✓				
27	Lock clapper	82697				✓				
28	Cover plug gas spring Prio 3A	51238				✓				
	Seat plates, see page "Solid seats"									

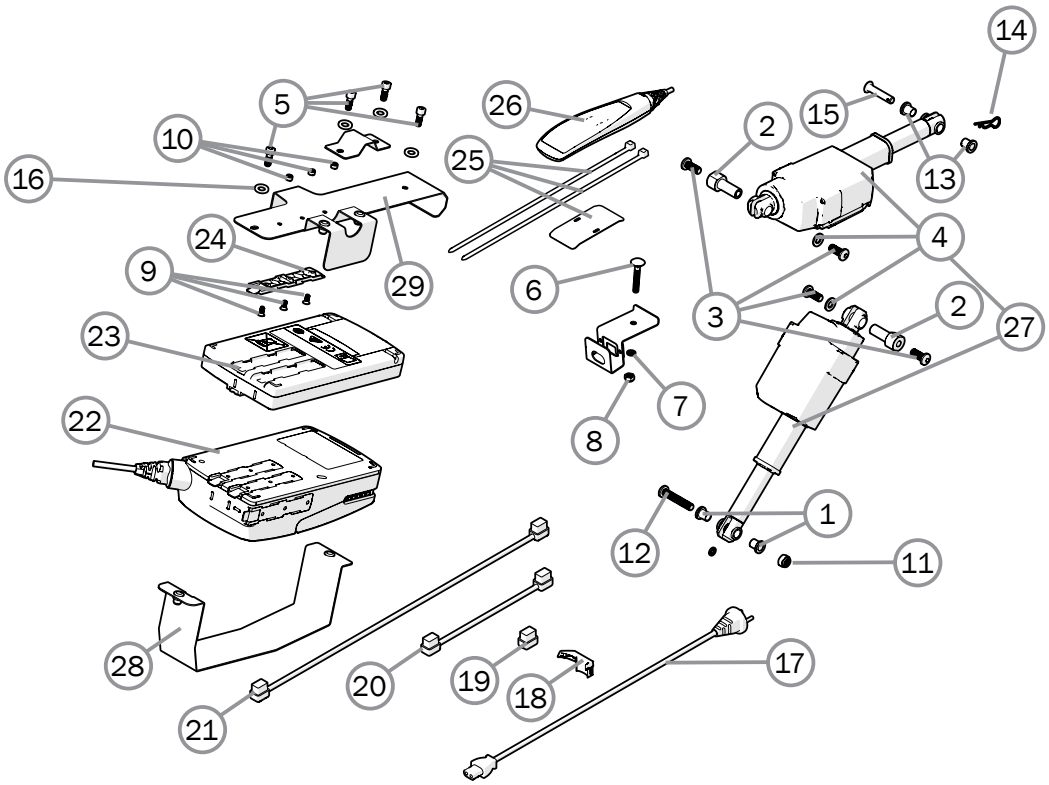

Pos.	Description	Item. No.	Cross 6	Cross 5	Cross 5 XL	Prio	Transit	Xact	Crissy Active	Crissy Sw-Aw.
1	Spacer electric tilt Prio					✓				
2	Spacer M8 electric tilt Prio					✓				
3	Screw M 8x 20 fzb					✓				
4	Cir clip RSM 5 stainless					✓				
5	Screw M 6x 16 MC6S 12.9					✓				
6	Screw M 6x 40 MVBF fzb					✓				
7	Washer BRB 6x3x10x1.5 fzb					✓				
8	Locking nut M 6 fzb					✓				
9	Screw M 4x 10 MF6S Fzb					✓				
10	Locking nut M 4 fzb					✓				
11	Locking nut M 8					✓				
12	Screw M 8x 45 MK6S Fzb					✓				
13	Spacer POM electric tilt Prio					✓				
14	Locking pin R t2					✓				
15	Bolt electric tilt Prio					✓				
16	Washer BRB 6.5x12x1.5					✓				
1-16	Screw kit	28370				✓				
17	Power plug powertilt Prio EU	83173				✓				
	Plug Great Britain	1140106				✓				
18	Cablelock actuator electric tilt P	83170				✓				
19	Plug controlbox electric tilt Prio	51155				✓				
20	Battery cabel electric tilt Prio	83167				✓				
21	Cabel actuator electric tilt Prio	83164				✓				
22	Control box electric tilt Prio	83166				✓				
23	Battery electric tilt Prio	83837				✓				
24	Bracket electric tilt Prio	83171				✓				
25	Bracket handcontrol Prio	28577				✓				
26	Handcontroll electric tilt Prio	83169				✓				
27	Actuator electric tilt Prio	83165				✓				
28	Attachment lower, electric tilt, mounted					✓				
29	Attachment upper, electric tilt, mounted					✓				
1-29	Electric tilt Prio compl kit	28898				✓				
19, 28, 29	Attachment electric tilt BA22 cpl	24841				✓				

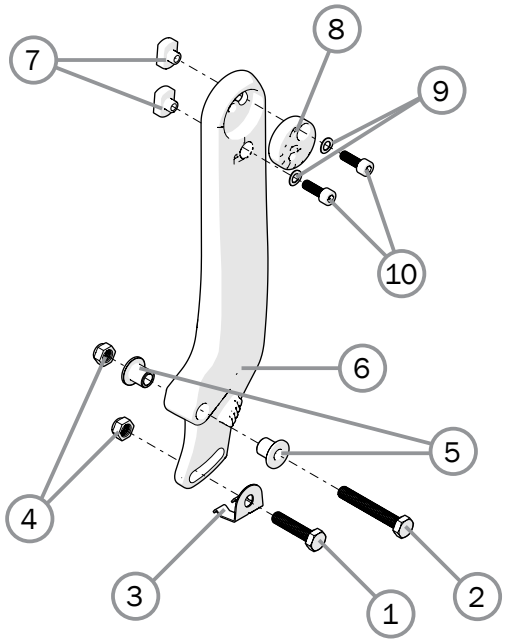

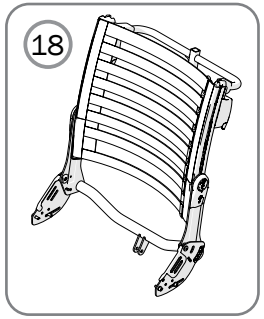

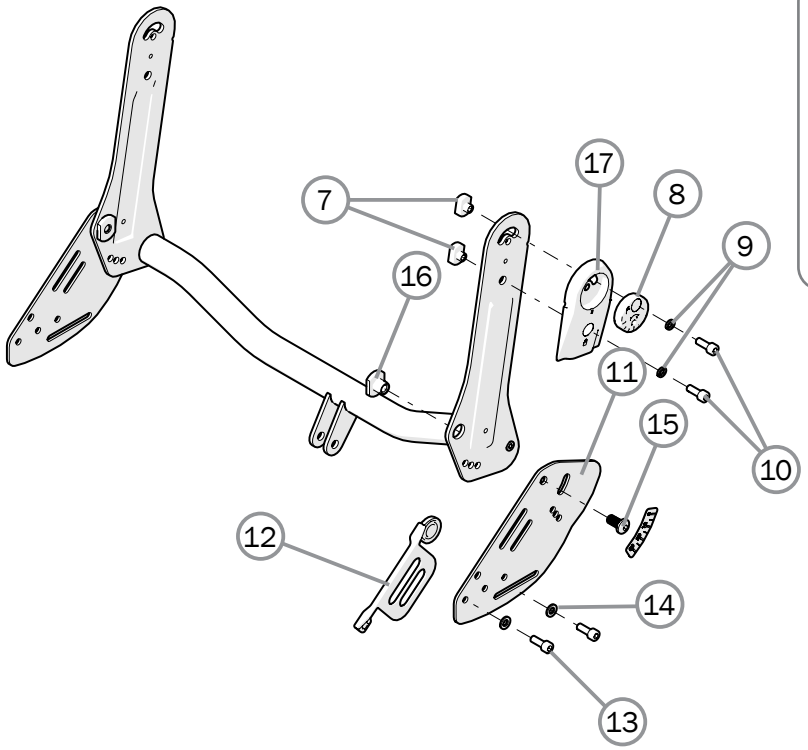

Pos.	Description	Item. no.	Cross 6	Cross 5	Cross 5 XL	Prio	Transit	Xact	Crissy Active	Crissy Sw-Aw.
1	Screw M8x30 M6S	11363	✓							
2	Screw M8x50 M6S FE/ZN P4	11705	✓							
3	Lock backrest chassi	83400	✓							
4	Locking nut M8 DIN 985	12051	✓							
5	Pin bushing Cross back 3A	82504	✓	✓	✓					
6	Back support chassis Cross back 3A right	83290-1	✓	✓	✓					
	Back support chassis Cross back 3A left	83290-2	✓	✓	✓					
7	Nut T-slot back Cross back mod 3	20028	✓	✓	✓					
8	Eccentric washer back support frame	83291	✓	✓	✓					
9	Circlip M6 wavy zink plated	13113	✓	✓	✓					
10	Screw M6x20 MC6S 12.9	11684	✓	✓	✓					
11	Back joint plate Prio mod 3	28674-01				✓				
12	Protection back support plate R	51226-1				✓				
	Protection back support plate L	51226-2				✓				
13	Screw M6x16 MC6S 12.9	11253				✓				
14	Washer 6.4x12x1.6 Zn8/P4	13030				✓				
15	Screw M8x16 K6S 10.9 driloc	11713				✓				
16	Joint nut	83316				✓				
17	Cover exenter 3A	51227				✓				
18	Back support frame Prio 40 incl back support upholstery (see page with back support upholstery)	28708				✓				
	Back support frame Prio 45 incl back support upholstery (see page with back support upholstery)	28709				✓				
	Back support frame Prio 50 incl back support upholstery (see page with back support upholstery)	28710				✓				
	Back support frame Prio 55 incl back support upholstery (see page with back support upholstery)	28711				✓				

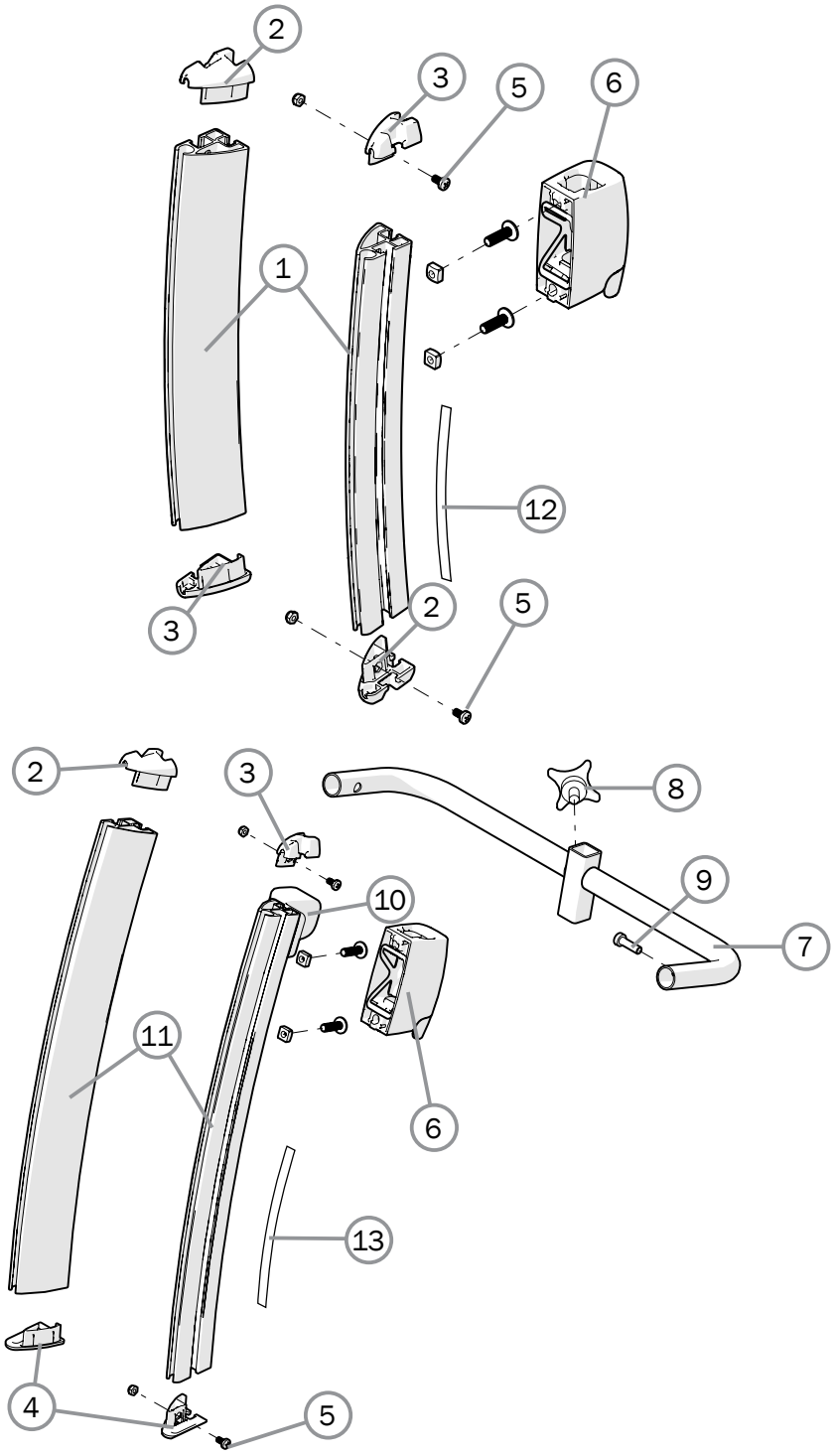

Pos.	Description	Item. No.	Cross 6	Cross 5	Cross 5 XL	Prio	Transit	Xact	Crissy Active	Crissy Sw-Aw.
1	Back rail mod 5 right	83519-1	✓	✓	✓					
	Back rail mod 5 left	83519-2	✓	✓	✓					
2	Dust cover 1 with locking nut	84109	✓	✓	✓	✓				
3	Dust cover 2 with locking nut	84110	✓	✓	✓	✓				
4	Cover back rail low R	51232-1				✓				
	Cover back rail low L	51232-2				✓				
5	Screw MRX M4x8	11441	✓	✓	✓	✓				
6	Attachment push handle cpl	28576	✓	✓		✓				
7	Head support attachment					✓				
8	Locking wheel M8x14 L	400118				✓				
9	Screw MC6LS 6x20 SW=5 svkr	11700				✓				
7-9	Head support attachment 3A 40	28680				✓				
	Head support attachment 3A 4	28681				✓				
	Head support attachment 3A 50	28682				✓				
	Head support attachment 3A 55	28683				✓				
10	Attachment					✓				
11	Back rail 3A mod 4 L 410 mm right	83530-1				✓				
	Back rail 3A mod 4 L 410 mm left	83530-2				✓				
2, 4-6, 10-11	Back rail 3A 4 cpl R	28703-1				✓				
3-6, 10-11	Back rail 3A 4 cpl L	28703-2				✓				
12	Label height adjustment	71377	✓	✓	✓					
13	Label back heigth 46-62	71887				✓				

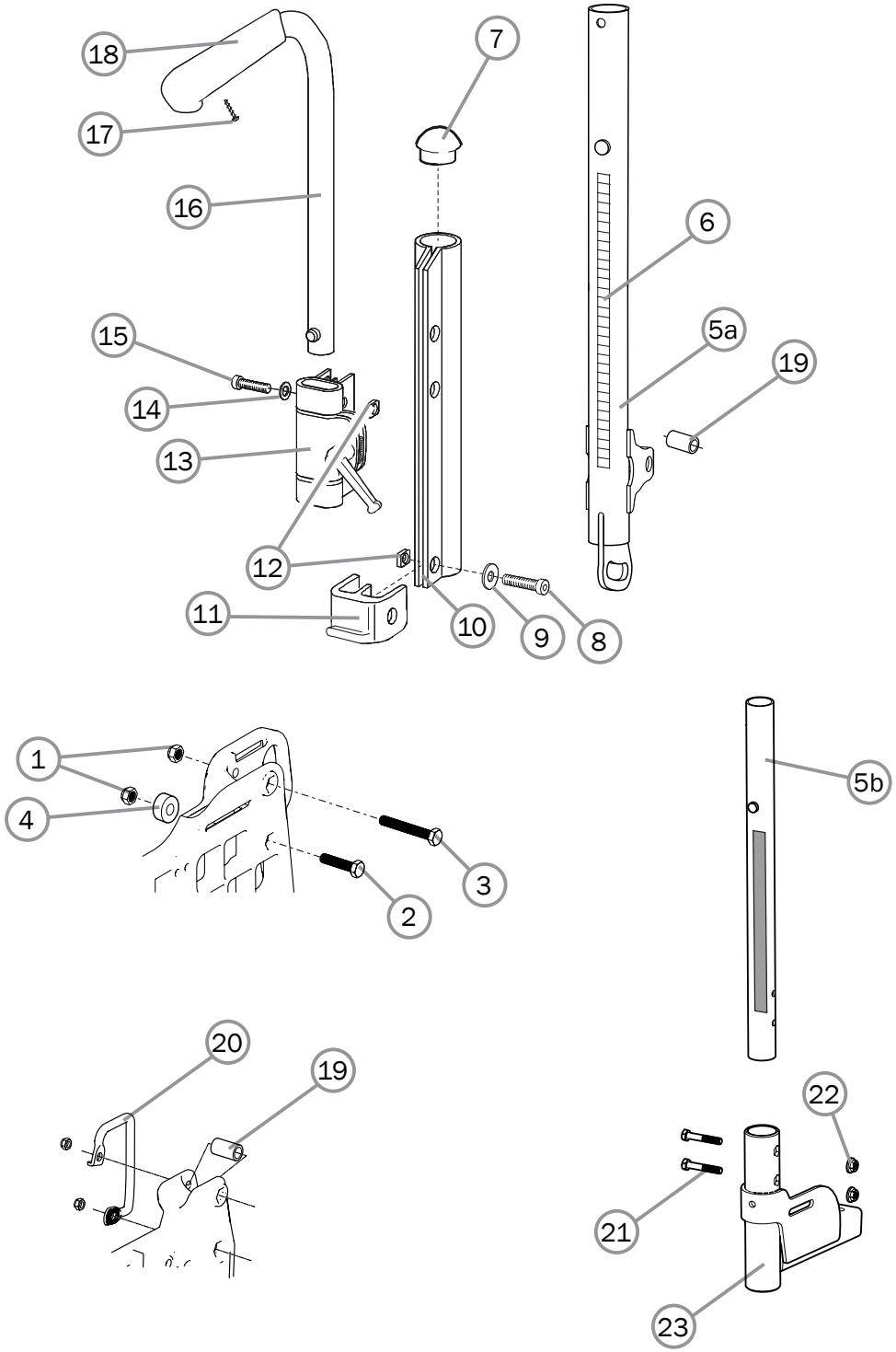

Pos.	Description	Item. No.	Cross 6	Cross 5	Cross 5 XL	Prio	Transit	Xact	Crissy Active	Crissy Sw-Aw.
1	Locking nut M8x 1 DIN 985	12051	✓	✓	✓					
2	Screw M8x1x30 black	11363	✓	✓	✓					
3	Screw M8x1x55 M6S 10.9 black	11432	✓	✓	✓					
4	Spacer 20/8.5/9.5	20320	✓							
5a	Back tube Cross back 2	25593-01	✓	✓	✓					
5b	Back support tube black	28432-01							✓	✓
6	Label height adjustment	71851	✓	✓	✓				✓	✓
7	Plug 25-21/23 R12.5	50248	✓	✓	✓				✓	✓
8	Screw M6x22 MC6S fzb	11012	✓	✓	✓				✓	✓
9	Washer BRB 6x3x10x1.5 fzb	13080	✓	✓	✓				✓	✓
10	Wedge back 6063A-T6	80851	✓	✓	✓				✓	✓
11	Dust cover Cross back 2 right	50405	✓	✓	✓				✓	✓
	Dust cover Cross back 2 left	50407	✓	✓	✓				✓	✓
12	Square nut high M6	12058	✓	✓	✓				✓	✓
5a-12	Back support tube compl. right	25609-01-1	✓	✓	✓					
	Back support tube compl. left	25609-01-2	✓	✓	✓					
5b-12	Back support tube compl. right	28451-01-1							✓	✓
	Back support tube compl. left	28451-01-2							✓	✓
13	Attachment push handles	25676	✓	✓	✓				✓	✓
14	Washer BRB M 6	13030	✓	✓	✓				✓	✓
15	Screw M6x30 MC6S 8.8 black esloc	11398	✓	✓	✓				✓	✓
16	Push handles height adjustable	27298	✓	✓	✓				✓	✓
17	Screw M6x25	11041	✓	✓	✓				✓	✓
18	Cover for handle	82221	✓	✓	✓				✓	✓
16-18	Push handle h adj Cross std	27338-01	✓	✓	✓				✓	✓
19	Joint support back	20319	✓	✓	✓					
20	Securement points right	82573		✓	✓					
	Securement points left	82574		✓	✓					
21	Screw M5x30 M6S zink plated	11403							✓	✓
22	Locking nut M5 M6MF fzb	12060							✓	✓
23	Adapter back Crissy 2B right	28431-01-1							✓	✓
	Adapter back Crissy 2B left	28431-01-2							✓	✓

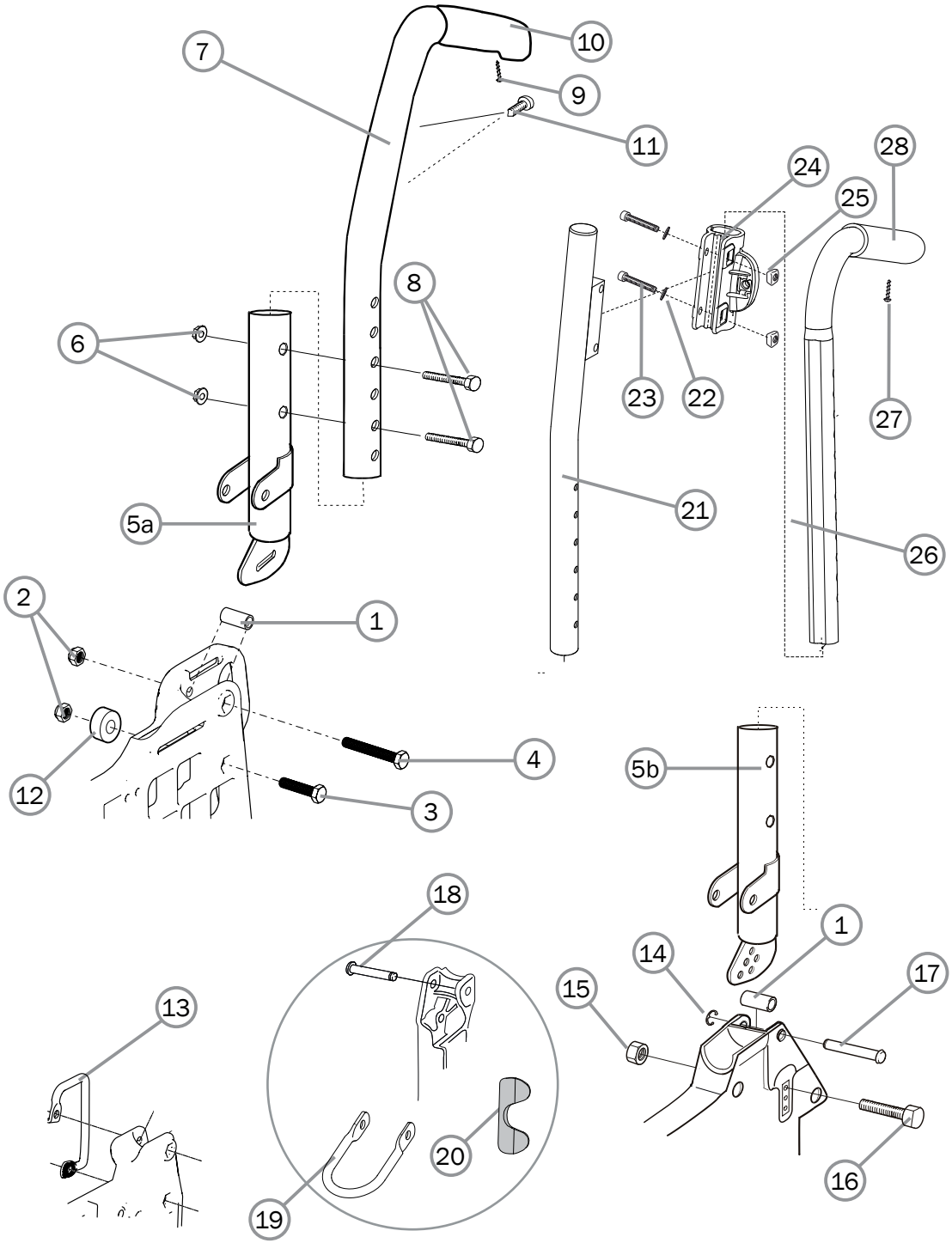

Pos.	Description	Item. No.	Cross 6	Cross 5	Cross 5 XL	Prio	Transit	Xact	Crissy Active	Crissy Sw-Aw.
1	Joint support back support	20319	✓	✓			✓			
2	Locking nut M8x1 DIN 985	12051	✓	✓						
3	Screw M8x1x30 10.9	11363	✓	✓						
4	Screw M8x55x1 M6S 10.9 black	11432	✓	✓						
5a	Back support attachment tube R Cross	26571-01-1	✓	✓						
	Back support attachment tube L Cross	26571-01-2	✓	✓						
5b	Back support tube attachment Transit III	25722-01					✓			
6	Locking nut M5 M6MF	12060	✓	✓			✓			
7	Back support tube w push handle	27344-01	✓	✓			✓			
8	Screw M5x30 M6S	11403	✓	✓			✓			
9	Screw B8x16 RTS st 4.2	11041	✓	✓			✓			
10	Cover for handle	82221	✓	✓			✓			
11	Screw M5x12 K6S 10.9	11208	✓	✓			✓			
12	Spacer	20320	✓							
13	Securement points right	82573		✓						
	Securement points left	82574		✓						
14	Cir clip RSM 6 stainless	13036					✓			
15	Locking nut M 6 zink plated	12017					✓			
16	Screw M6x18 Fe/Zn8/P1	11449					✓			
17	Axle back joint	20318					✓			
18	Axle positioning belt	20416					✓			
19	Transport attachments back	81980					✓			
20	Protection seatbelt	50871					✓			
18-20	Securement points Cr/Tr/Tw	26910					✓			
21	Attachment tube push handles	25776-01					✓			
22	Washer BRB M6 black	13030					✓			
23	Screw Mx30 MC6S	11398					✓			
24	Attachment push handles	25676					✓			
25	Square nut high M6	12058					✓			
26-28	See Back support tubes Crossback 2						✓			

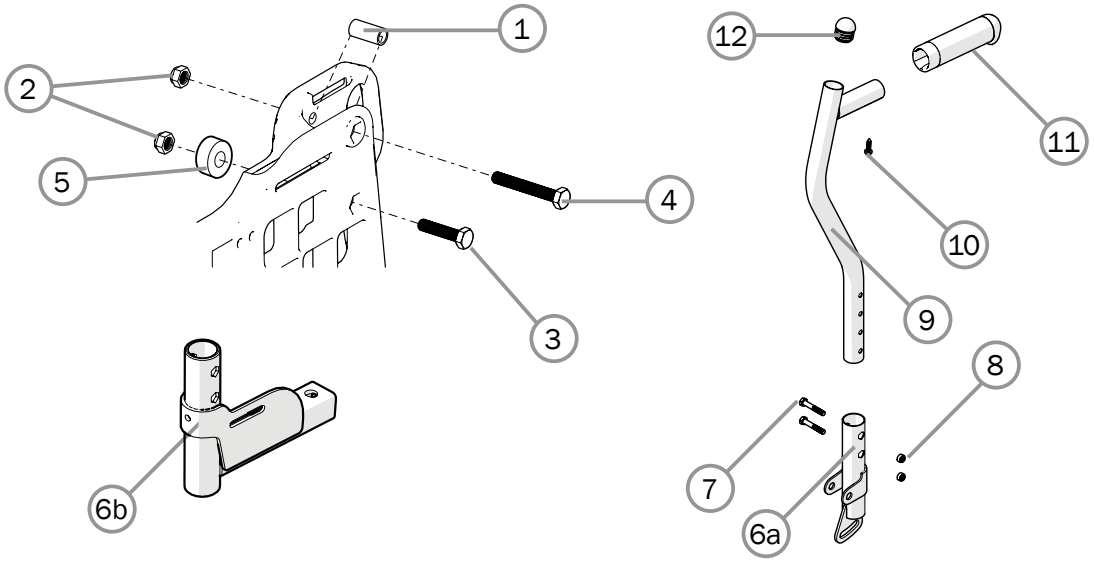

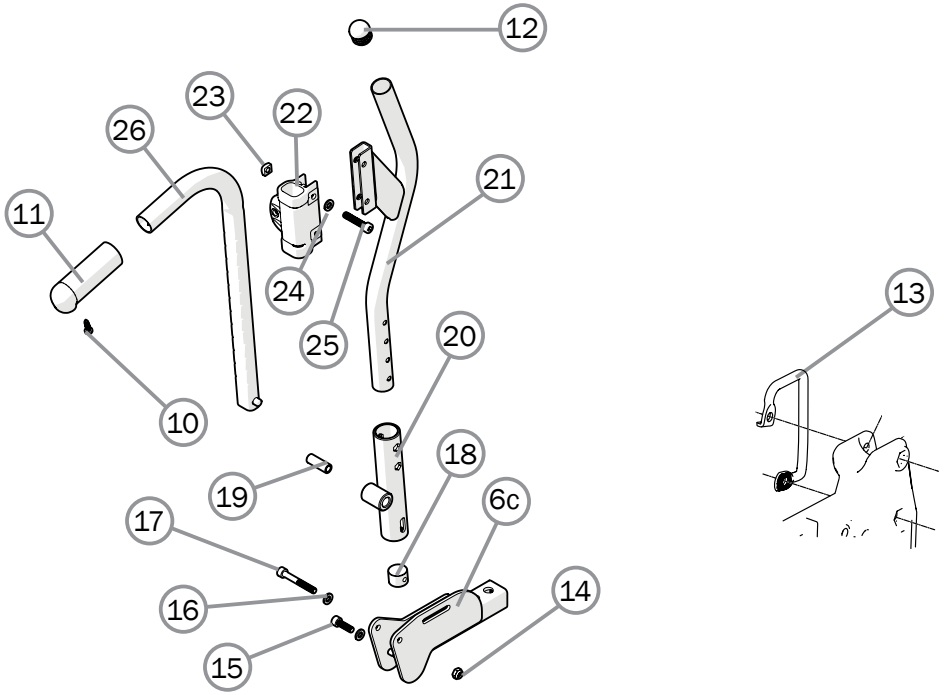

Pos.	Description	Item. No.	Cross 6	Cross 5	Cross 5 XL	Prio	Transit	Xact	Crissy Active	Crissy Sw-Aw.
1	Joint support back support	20319	✓	✓						
2	Locking nut M8x1 DIN 985	12051	✓	✓						
3	Screw M8x1x30 10.9	11363	✓	✓						
4	Screw M8x55x1 M6S 10.9 black	11432	✓	✓						
5	Spacer	20320	✓							
6a	Back support attachment B2B cpl	28366-01	✓	✓						
6b	Adapter back Crissy 2B right	28431-01-1							✓	✓
	Adapter back Crissy 2B left	28431-01-2							✓	✓
6C	Attachment sideframe angle adj right	28557-01-1							✓	✓
	Attachment sideframe angle adj left	28557-01-2							✓	✓
7	Screw M 5x 30 M6S zink plated	11403	✓	✓					✓	✓
8	Locking nut M 5 black DIN 985-6	12060	✓	✓					✓	✓
9	Back support tube low		✓	✓					✓	✓
	Back support tube high		✓	✓					✓	✓
9-12	Back support tube with push handle B2B low incl cover for handle	28760	✓	✓					✓	✓
	Back support tube with push handle B2B high incl cover for handle	28761	✓	✓					✓	✓
10	Screw B 8x16 RTS zink plated 4.2	11041	✓	✓					✓	✓
11	Cover for handle L80	28364	✓	✓					✓	✓
12	End plug black	51174	✓	✓					✓	✓
13	Securement points right	82573		✓						
	Securement points left	82574		✓						
14	Locking nut M6 fzb DIN 985-6	12017							✓	✓
15	Screw M6x20 MC6S	11392							✓	✓
16	Washer 6,5x12x1,5	13030							✓	✓
17	Screw M6x45 MC6S A2	11016							✓	✓
18	Nut D20 L15 M6	20533							✓	✓
19	Sleeve	20532							✓	✓
20	Attachment back angle adj	28558-01							✓	✓
6c, 14-20	Adapter angle adj back right	28559-1							✓	✓
	Adapter angle adj back left	28559-2							✓	✓
21	Back support adj handle 2B low right	28766-1							✓	✓
	Back support adj handle 2B low left	28766-2							✓	✓
	Back support adj handle 2B high right	28767-1							✓	✓
	Back support adj handle 2B high left	28767-2							✓	✓
22-26	See back support Crossback 2								✓	✓

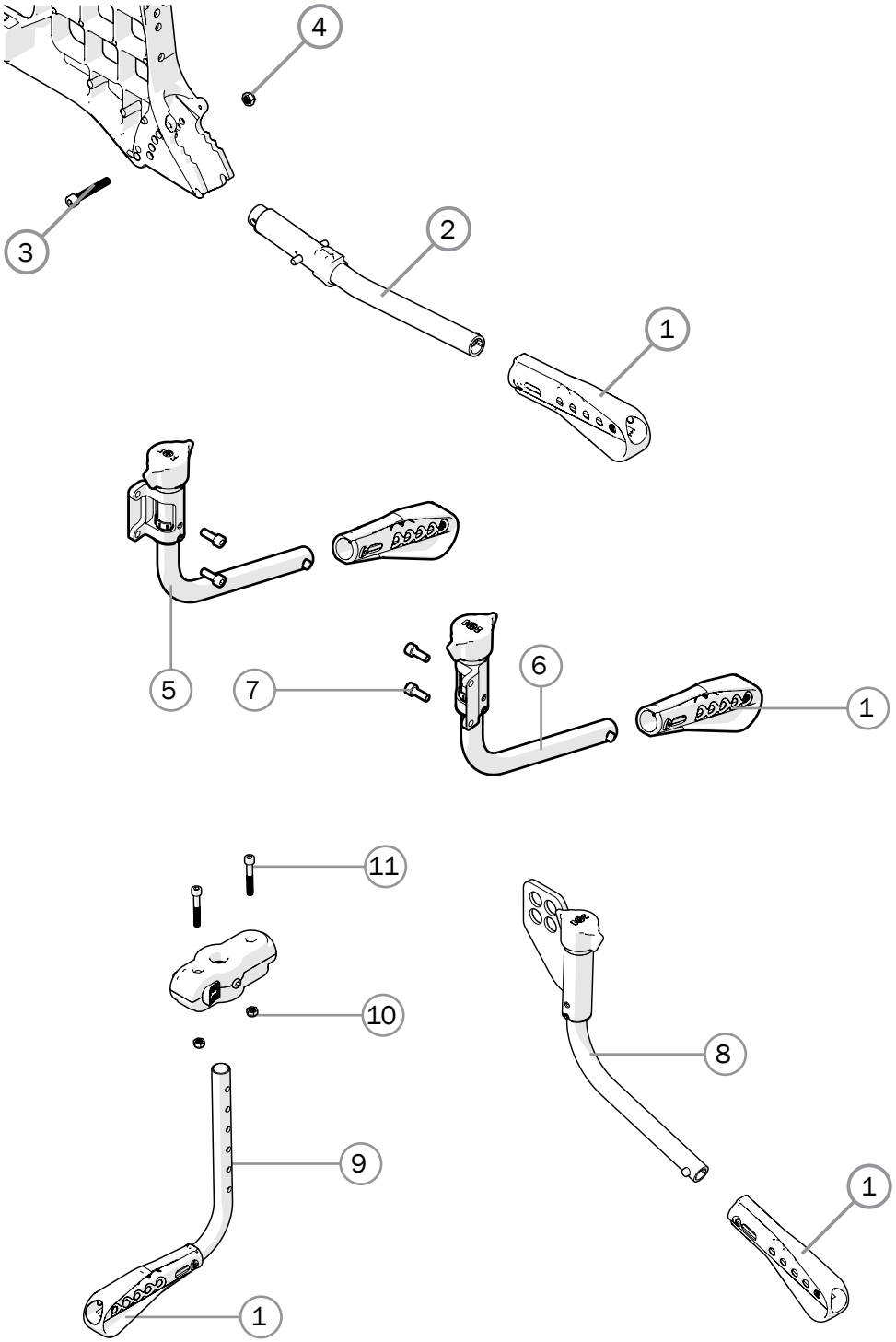

Pos.	Description	Item. No.	Cross 6	Cross 5	Cross 5 XL	Prio	Transit	Xact	Crissy Active	Crissy Sw-Aw.
1	Anti tip extension multi	51201	✓	✓	✓	✓	✓			
2	Anti tip multi cc59		✓	✓	✓	✓	✓			
	Anti tip multi cc66		✓	✓	✓	✓	✓			
3	Screw M6x40 MC6S zink plated	11229	✓	✓	✓	✓	✓			
4	Locking nut M6 zink plated	12017	✓	✓	✓	✓	✓			
1-4	Anti tip multi Cross 5/6 Prio cc 59 cpl	28457	✓	✓	✓	✓	✓			
	Anti tip multi Transit III Cross 2 Next cc 66 cpl	28458	✓				✓			
5	Anti tip R							✓		
6	Anti tip L							✓		
7	Screw M6x16 MC6S 12.9	11253						✓		
1, 5, 7	Anti-tip 1 ri cpl	24163-1						✓		
	Anti-tip 2 ri cpl	24164-1						✓		
	Anti-tip 3 ri cpl	24165-1						✓		
	Anti-tip 4 ri cpl	24166-1						✓		
1, 6-7	Anti-tip 1 le cpl	24163-2						✓		
	Anti-tip 2 le cpl	24164-2						✓		
	Anti-tip 3 le cpl	24165-2						✓		
	Anti-tip 4 le cpl	24166-2						✓		
8	Anti-tip								✓	✓
1, 8	Anti-tip active right	28520-1							✓	✓
	Anti-tip active left	28520-2							✓	✓
9	Anti-tip								✓	✓
10	Locking nut M6 zink plated DIN 985-6	12017							✓	✓
11	Screw M6x40 MC6S 10.9 zink plated	11229							✓	✓
1, 9-11	Anti-tip cpl	28600							✓	✓

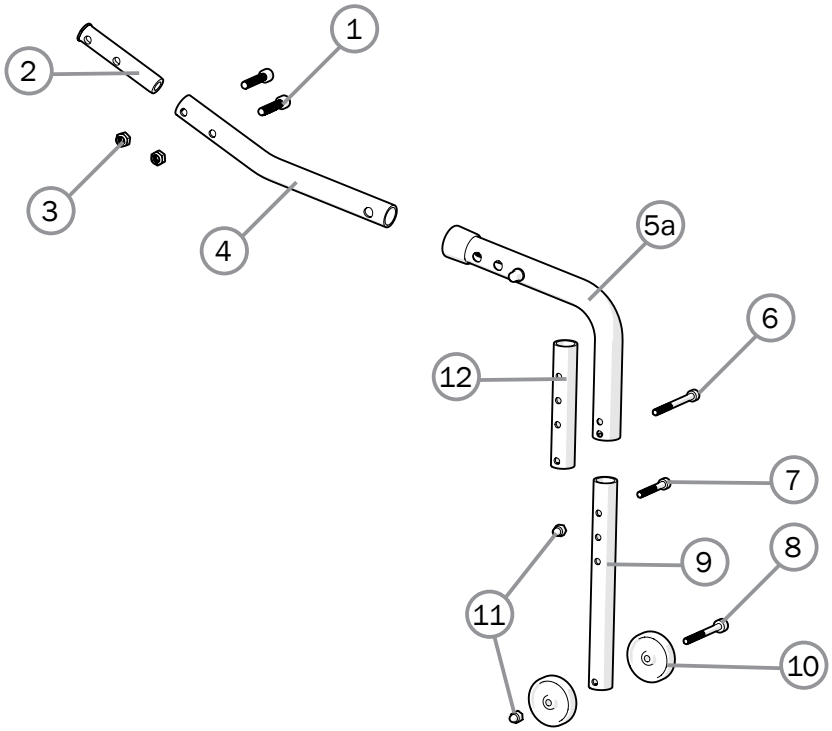

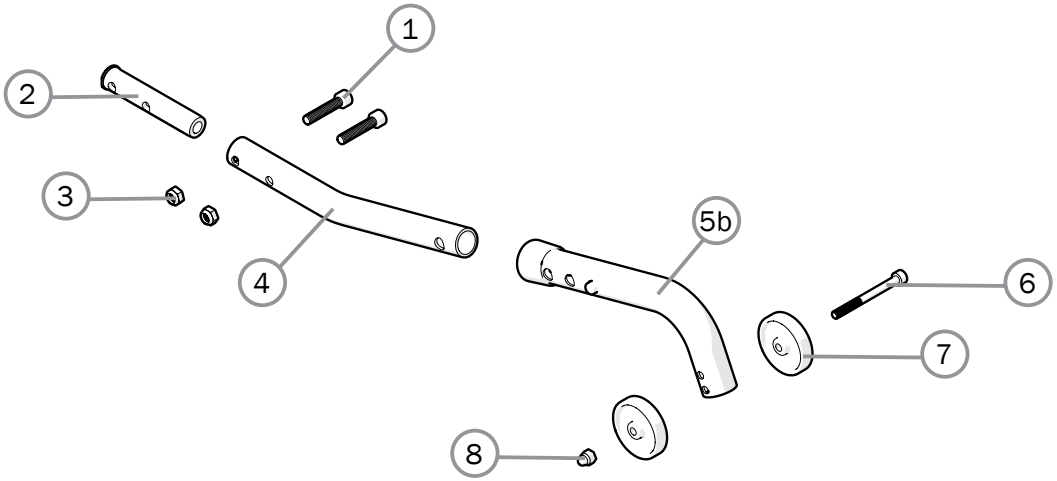

Pos.	Description	Item. No.	Cross 6	Cross 5	Cross 5 XL	Prio	Transit	Xact	Crissy Active	Crissy Sw-Aw.
1	Screw M6x30 MC6S	11019		✓						
2	Support sleeve anti-tip mod 2	20530		✓						
3	Locking nut M6 DIN 985-6	12017		✓						
4	Holder anti-tip mod 2	28468		✓						
5a	Tube anti-tip	25374		✓						
5b	Tube anti-tip long	28466		✓						
6	Screw M5x55 MC6S 8.8	11686		✓						
7	Screw M5x30 MC6S	11346		✓						
8	Screw M5x50 MC6S 8.8	11687		✓						
9	Extension anti-tip	28467		✓						
10	Wheel 40/5,2/12 anti-tip	80727		✓						
11	Locking nut M5 domed	12168		✓						
12	Extension short	25376		✓						
1-8	Anti tip mod 2 low	28471		✓						
1-12	Anti-tip mod 2 std	28470		✓						

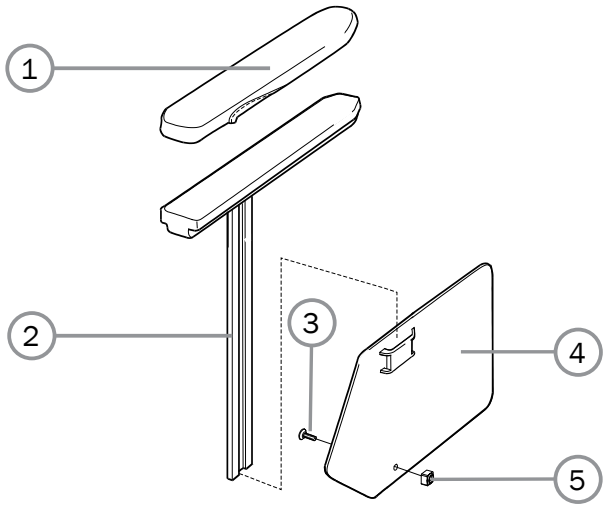

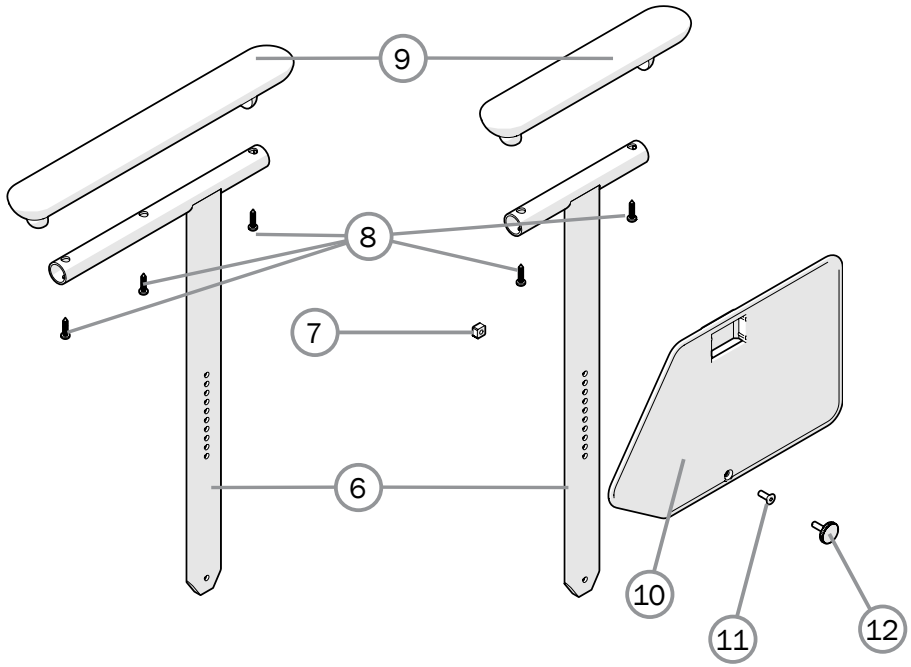

Pos.	Description	Item. No.	Cross 6	Cross 5	Cross 5 XL	Prio	Transit	Xact	Crissy Active	Crissy Sw-Aw.
1	Cover arm support short dark grey	62282-60	✓	✓	✓		✓		✓	✓
	Cover arm support long dark grey	62283-60	✓	✓	✓	✓	✓		✓	✓
	Cover arm support Gel short compl dark grey	26240-60	✓	✓	✓		✓		✓	✓
	Cover arm support Gel long compl dark grey	26241-60	✓	✓	✓	✓	✓		✓	✓
	Cover arm support short Dartex	62282-63	✓	✓	✓		✓		✓	✓
	Cover arm support long Dartex	62283-63	✓	✓	✓	✓	✓		✓	✓
	Cover arm support Gel short compl Dartex	26240-63	✓	✓	✓		✓		✓	✓
	Cover arm support Gel long compl Dartex	26241-63	✓	✓	✓	✓	✓		✓	✓
2-5	Arm support Cross short right L 25 cm	25172-1	✓	✓	✓		✓		✓	✓
	Arm support Cross short left L 25 cm	25172-2	✓	✓	✓		✓		✓	✓
	Arm support Cross long right L 38 cm	25173-1	✓	✓	✓		✓		✓	✓
	Arm support Cross long left L 38 cm	25173-2	✓	✓	✓		✓		✓	✓
3	Screw M5x14 MF6S 10.9 black	11237	✓	✓	✓		✓		✓	✓
4	Sideguard Cross/M100 nylon right	50316	✓	✓	✓		✓		✓	✓
	Sideguard Cross/M100 nylon left	50317	✓	✓	✓		✓		✓	✓
5	Stop bar for arm support	80661	✓	✓	✓		✓		✓	✓
6	Arm support detachable pad short without pad	28684							✓	✓
	Arm support detachable pad long right without pad	28685-1							✓	✓
	Arm support detachable pad long left without pad	28685-2							✓	✓
7	Stop bar for arm support	80661							✓	✓
8	Screw B 8x19 RXS/A2 Ph st 4.2	11064							✓	✓

Pos.	Description	Item. No.	Cross 6	Cross 5	Cross 5 XL	Prio	Transit	Xact	Crissy Active	Crissy Sw-Aw.
9	Arm support pad short right	82294-1							✓	✓
	Arm support pad short left	82294-2							✓	✓
	Arm support pad long right	82295-1							✓	✓
	Arm support pad long left	82295-2							✓	✓
10	Sideguard right	50316							✓	✓
	Sideguard left	50317							✓	✓
11	Screw M5x14 MF6S 10.9 black Esloc	11237							✓	✓
12	Finger Screw	82402							✓	✓
6-11	Arm support detachable pad short right	28780-1							✓	✓
	Arm support detachable pad short left	28780-2							✓	✓
	Arm support detachable pad long right	28781-1							✓	✓
	Arm support detachable pad long left	28781-2							✓	✓
6-10, 12	Arm support detachable pad short right with finger screw	28782-1							✓	✓
	Arm support detachable pad short left with finger screw	28782-2							✓	✓
	Arm support detachable pad long right with finger screw	28783-1							✓	✓
	Arm support detachable pad long left with finger screw	28783-2							✓	✓

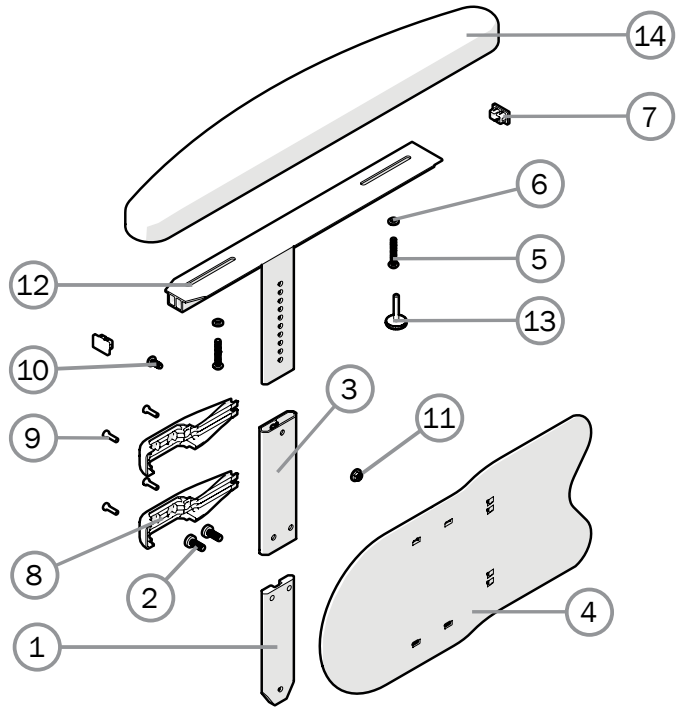

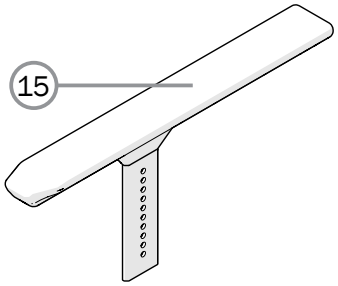

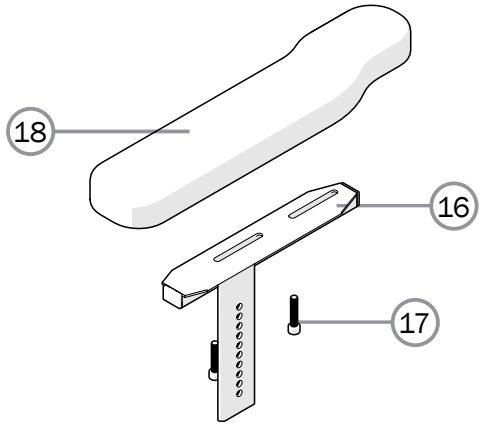

Pos.	Description	Item. No.	Cross 6	Cross 5	Cross 5 XL	Prio	Transit	Xact	Crissy Active	Crissy Sw-Aw.
1	Profile					✓				
2	Screw					✓				
3	Profile sleeve					✓				
4	Side guard	51256				✓				
5	Screw M5x30	11446				✓				
6	Joint bushing	50285				✓				
7	End cap	51195				✓				
8	Clamp side guard	51208				✓				
9	Screw K40x14	11419				✓				
10	Screw M6x12 MC6S 8.8 zink plated	11022				✓				
11	Locking nut M6 zink plated DIN 985-6	12017				✓				
12	Arm support profile ri					✓				
	Arm support profile le					✓				
13	Fingerscrew	83803				✓				
14	Arm support cushion	83266				✓				
15	Arm support solid plate ri					✓				
	Arm support solid plate le					✓				
1-12, 14	Arm support telescope L49 ri	28827-1				✓				
	Arm support telescope L49 le	28827-2				✓				
1-4, 6-14	Arm support telescope L49 ri fingerscrew	28828-1				✓				
	Arm support telescope L49 le fingerscrew	28828-2				✓				
1-13, 15	Arm support telescope L38 ri	28826-1				✓				
	Arm support telescope L38 le	28826-2				✓				
1-13	Arm support telescope without cushion ri	28832-1				✓				
	Arm support telescope without cushion le	28832-2				✓				
16	Console arm support short right	29005-1				✓				
	Console arm support short left	29005-2				✓				
17	Screw M6x30 MC6S zink plated	11019				✓				
18	Armrest pu. Wombat sz 4. Right	316175163				✓				
	Armrest pu. Wombat sz 4. Left	316175164				✓				
1-4, 6-11, 16-18	Arm support L37 cm adj length R	28801-1				✓				
	Arm support L37 cm adj length L	28801-2				✓				
1-4, 6-11, 16	Arm support telescope multi short cpl R	28805-1				✓				
	Arm support telescope multi short cpl L	28805-2				✓				

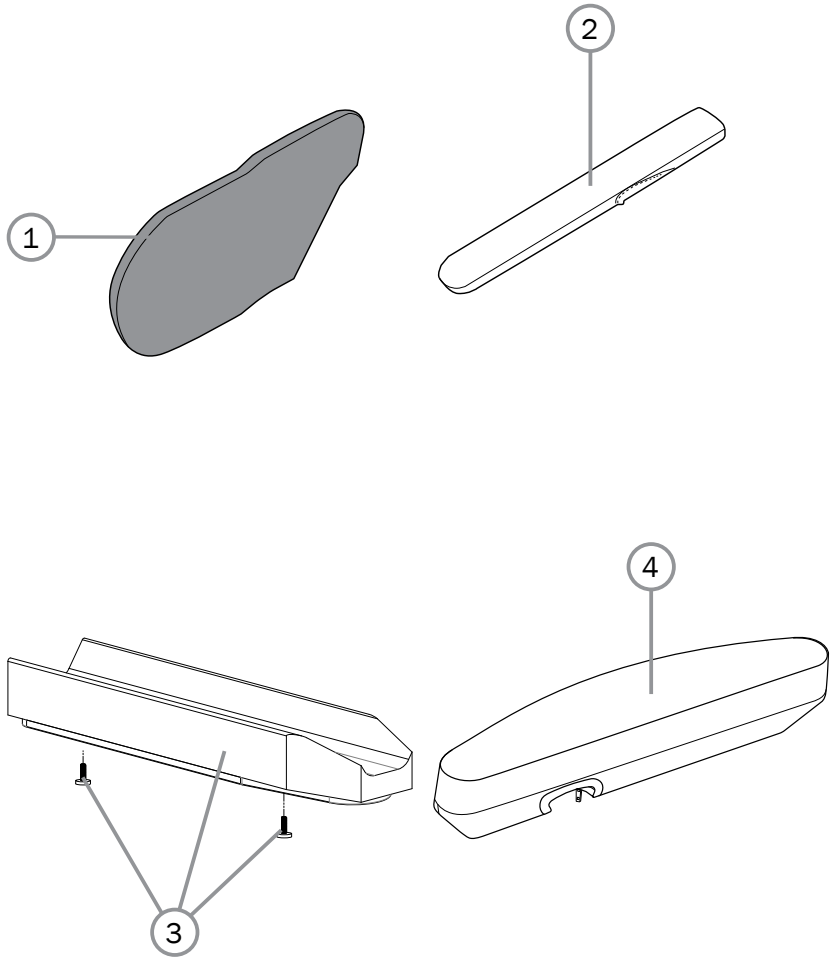

Pos.	Description	Item. No.	Cross 6	Cross 5	Cross 5 XL	Prio	Transit	Xact	Crissy Active	Crissy Sw-Aw.
1	Padding side guard ri	63271-1				✓				
	Padding side guard le	63271-2				✓				
2	Cover arm support long	62283-60				✓				
	Cover arm support gel long	26241-60				✓				
	Cover arm support long Dartex	62283-63				✓				
	Cover arm support gel long Dartex	26241-63				✓				
3	Arm support pad soft wide incl screw	28640				✓				
4	Arm support pad Prio ri	63193-60-1				✓				
	Arm support pad Prio le	63193-60-2				✓				

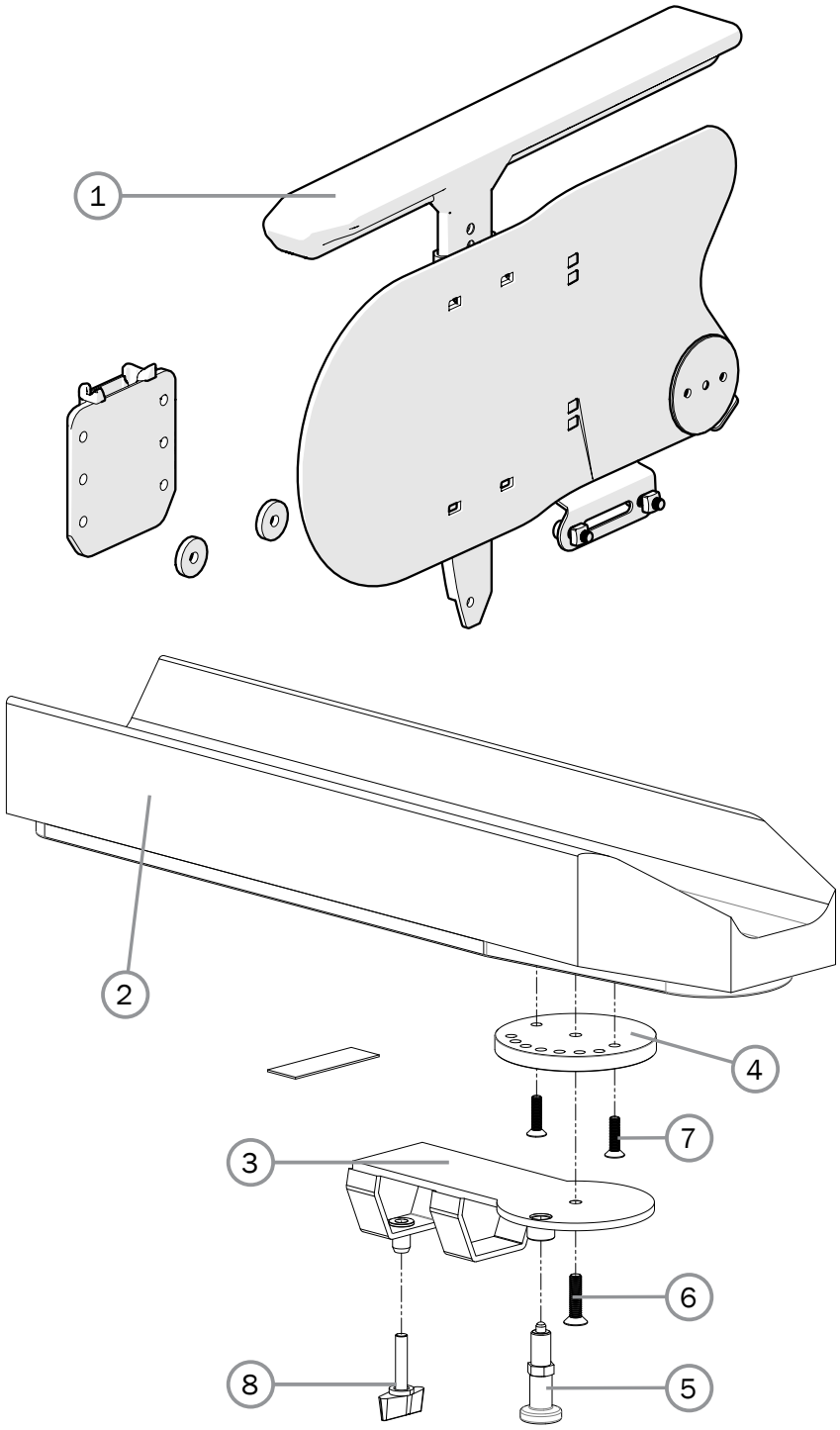

Pos.	Description	Item. No.	Cross 6	Cross 5	Cross 5 XL	Prio	Transit	Xact	Crissy Active	Crissy Sw-Aw.
1	Arm support flip up ha short R	28842-1	✓							
	Arm support flip up ha short L	28842-2	✓							
	Arm support flip up ha long R	28843-1	✓							
	Arm support flip up ha long L	28843-2	✓							
2	Arm support pad hemi	62910-60				✓				
3	Attachment arm support hemi right	27265-1				✓				
	Attachment arm support hemi left	27265-2				✓				
4	Turntable right	27280-1				✓				
	Turntable left	27280-2				✓				
5	Adjusting bolt M10x1	82338				✓				
6	Screw M6x25 MF6S svkr esloc	11430				✓				
7	Screw M5x20 MF6S black chrome	11526				✓				
8	Handle M6x30	82033				✓				
2-8	Arm support hemi Cross/Prio right	25770-60-1				✓				
	Arm support hemi Cross/Prio left	25770-60-2				✓				

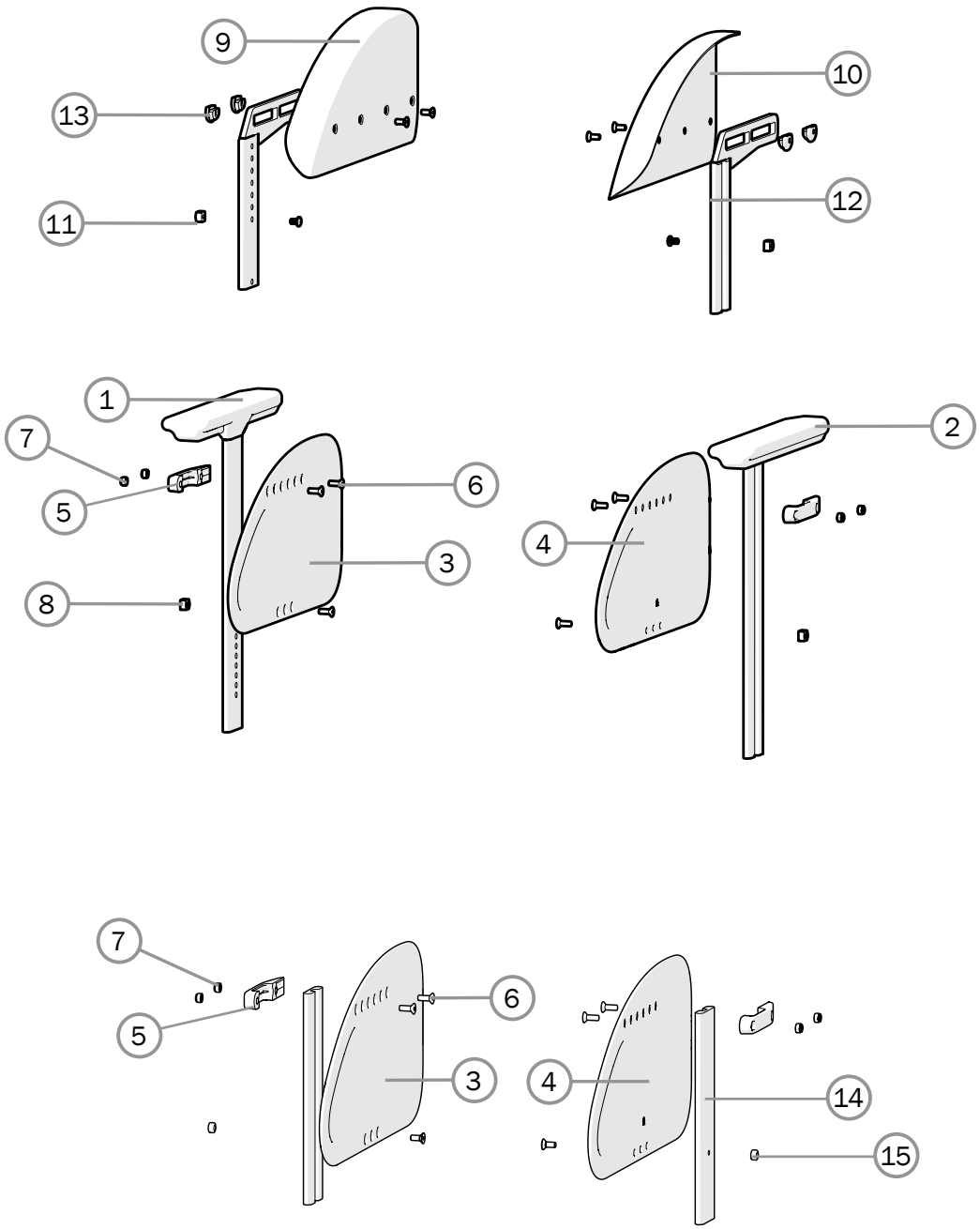

Pos.	Description	Item. No.	Cross 6	Cross 5	Cross 5 XL	Prio	Transit	Xact	Crissy Active	Crissy Sw-Aw.
1, 3, 5-7	Arm supports active cpl ri	28855-1						✓	✓	✓
2, 4, 5-7	Arm supports active cpl le	28855-2						✓	✓	✓
3-7	Side guard active d adj cpl	28857						✓	✓	✓
1	Arm support ri							✓	✓	✓
2	Arm support le							✓	✓	✓
3	Sideguard ri							✓	✓	✓
4	Sideguard le							✓	✓	✓
5	Attachment side guard							✓	✓	✓
6	Screw M5x14 MF6S Zn8/P esloc							✓	✓	✓
7	Locking nut stainless steel							✓	✓	✓
8	Stop bar arm support							✓	✓	✓
9	Mudguard S ri	51292-1						✓	✓	✓
	Mudguard M ri	51293-1						✓	✓	✓
	Mudguard L ri	51294-1						✓	✓	✓
10	Mudguard S le	51292-2						✓	✓	✓
	Mudguard M le	51293-2						✓	✓	✓
	Mudguard L le	51294-2						✓	✓	✓
11	Attachment mudguard 155 ri	24083-1						✓	✓	✓
12	Attachment mudguard 155 le	24083-2						✓	✓	✓
13	T-nut M5 offset	12079						✓	✓	✓
6-9, 11, 13	Mudguard S profile ri 155 cpl	24091-1						✓	✓	✓
	Mudguard M profile ri 155 cpl	24092-1						✓	✓	✓
	Mudguard L profile ri 155 cpl	24093-1						✓	✓	✓
6-8, 10, 12-13	Mudguard S profile le 155 cpl	24091-2						✓	✓	✓
	Mudguard M profile le 155 cpl	24092-2						✓	✓	✓
	Mudguard L profile le 155 cpl	24093-2						✓	✓	✓
14	Vertical profile side guard							✓	✓	✓
15	Spacer handrim short							✓	✓	✓
3, 5-7, 14-15	Side guard active R w profile 200 mm	24592-1						✓	✓	✓
	Side guard active d adj R cpl w profile 266,5 mm	24781-1	✓							
4-7, 14-15	Side guard active L w profile 200 mm	24592-2						✓	✓	✓
	Side guard active d adj L cpl w profile 266,5 mm	24781-2	✓							

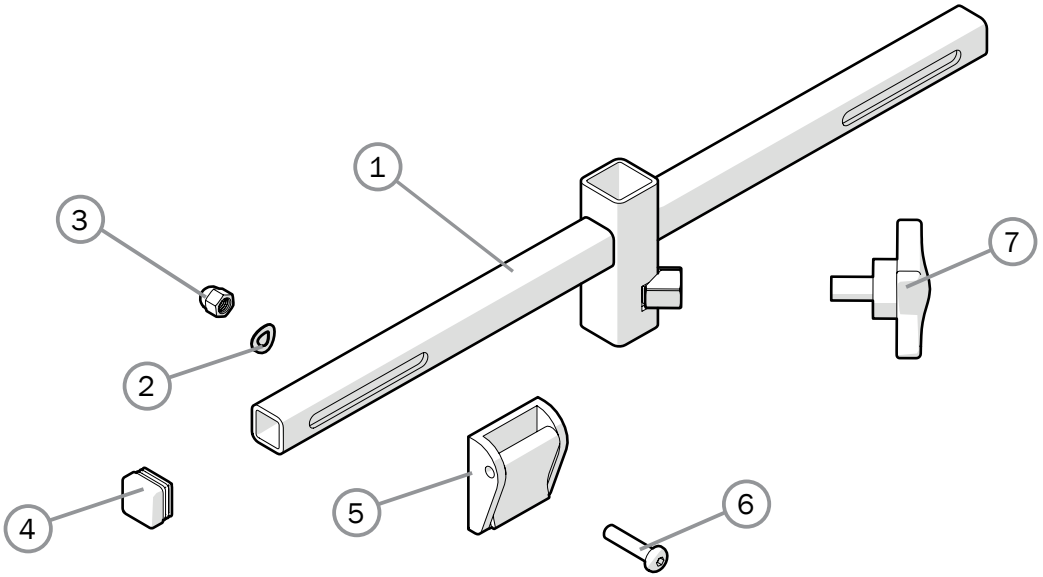

Pos.	Description	Item. No.	Cross 6	Cross 5	Cross 5 XL	Prio	Transit	Xact	Crissy Active	Crissy Sw-Aw.
1-7	Attachment harness cpl	28186				✓				
1	Attachment harness					✓				
2	Washer D10x5.3x0.5	13017				✓				
3	Domed nut M5	12167				✓				
4	End plug	50972				✓				
5	Fix lock 25 mm	310445025				✓				
6	Screw M5x22 MK6S fzb	11075				✓				
7	Knob	400118				✓				

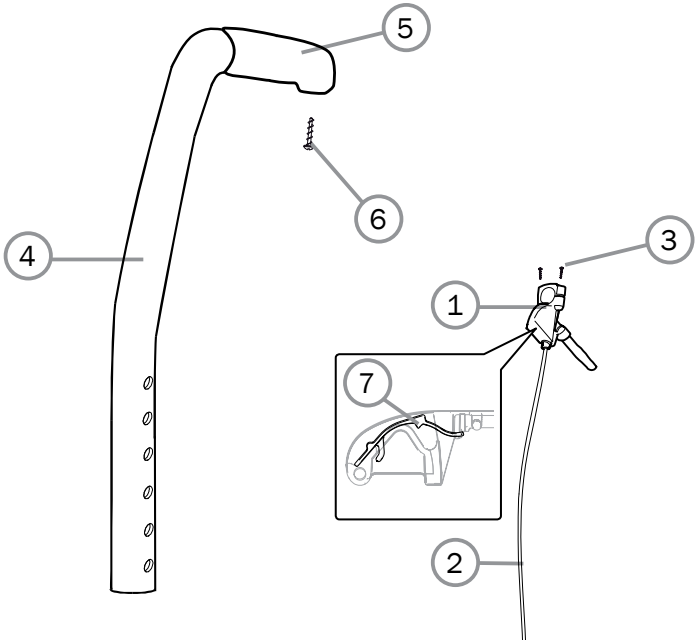

Pos.	Description	Item. No.	Cross 6	Cross 5	Cross 5 XL	Prio	Transit	Xact	Crissy Active	Crissy Sw-Aw.
1	Brake handle Al	82585	✓	✓	✓		✓			
2	Wire kit drum brake Cross Twin Tran	81805	✓	✓	✓				✓	✓
	Wire kit drumbrake Transit	81935					✓			
3	Screw DG 5x20 WN 1552	11504	✓	✓	✓		✓		✓	✓
4	Back support tube	27343-01	✓	✓	✓		✓			
5	Cover for handle drum brake	82221	✓	✓	✓		✓			
6	Screw B8x16	12060	✓	✓	✓		✓			
7	Wire lock brake handle 100 mm 10 pcs	82854	✓	✓	✓		✓			
4-6	Back support tube with push handle drum brake	27345-01	✓	✓	✓		✓		✓	✓
1-3	Brake kit Transit III	26001					✓			

Pos.	Description	Item. No.	Cross 6	Cross 5	Cross 5 XL	Prio	Transit	Xact	Crissy Active	Crissy Sw-Aw.
1	Back angle control cpl	28573				✓				

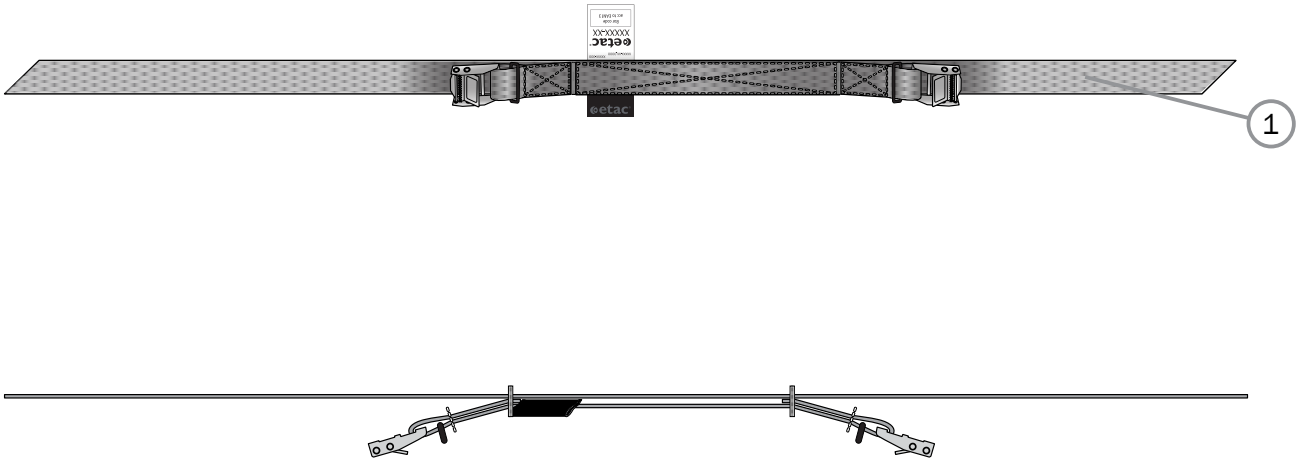

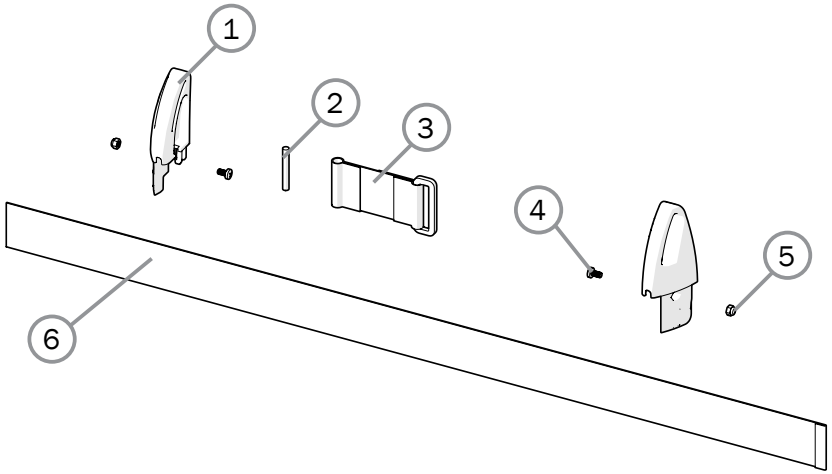

Pos.	Description	Item. No.	Cross 6	Cross 5	Cross 5 XL	Prio	Transit	Xact	Crissy Active	Crissy Sw-Aw.
1-6	Extension back 3A 35-40 cpl	28658	✓	✓	✓	✓				
	Extension back 3A 42,5-50 cpl	28659	✓	✓	✓	✓				
	Extension back 3A 52,5-60 cpl	28660	✓	✓	✓	✓				
1	Extension back R	51223-1	✓	✓	✓	✓				
	Extension back L	51223-2	✓	✓	✓	✓				
2	Tension rod	51222	✓	✓	✓	✓				
3	Loop extension back 3A cpl	63294	✓	✓	✓	✓				
4	Screw M4x8 MRX black 4.8 pos	11441	✓	✓	✓	✓				
5	Locking nut M4 zink plated	12026	✓	✓	✓	✓				
6	Seat depth extension 35-40 cm	63291	✓	✓	✓	✓				
	Seat depth extension 42,5-50 cm	63292	✓	✓	✓	✓				
	Seat depth extension 52,5-60 cm	63293	✓	✓	✓	✓				

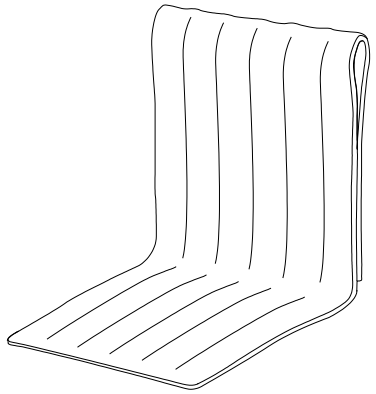

Pos.	Description	Item. No.	Cross 6	Cross 5	Cross 5 XL	Prio	Transit	Xact	Crissy Active	Crissy Sw-Aw.
1	Cover back 35 cm (14") dark grey	62135-60	✓	✓			✓			
	Cover back 37.5 cm (15") dark grey	62387-60	✓	✓					✓	✓
	Cover back 40 cm (16") dark grey	62136-60	✓	✓			✓		✓	✓
	Cover back 42.5 cm (17") dark grey	62388-60	✓	✓					✓	✓
	Cover back 45 cm (18") dark grey	62137-60	✓	✓			✓		✓	✓
	Cover back 47.5 cm (19") dark grey	62389-60	✓	✓					✓	✓
	Cover back 50 cm (20") dark grey	62305-60	✓	✓			✓		✓	✓
	Cover back 52.5 cm (21") dark grey	62432-60	✓	✓						
	Cover back 55 cm (22") dark grey	62433-60		✓	✓					
	Cover back 57.5 cm (23") dark grey	62434-60			✓					
	Cover back 60 cm (24") dark grey	62435-60			✓					
	Adapter seat upholstery loop-loop	28484	✓	✓	✓				✓	✓

(widened backrest +5 cm)

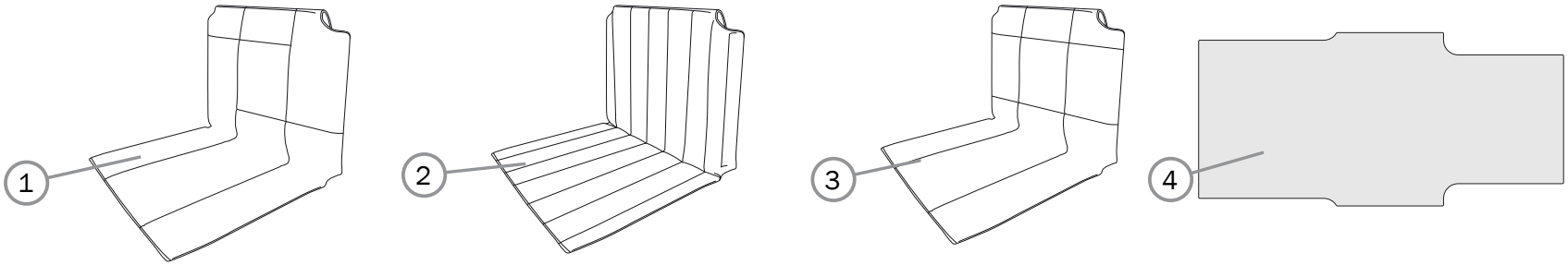

Pos.	Description	Item. No.	Cross 6	Cross 5	Cross 5 XL	Prio	Transit	Xact	Crissy Active	Crissy Sw-Aw.
1	Cover back Cross mod 3 35 cm (14") dark grey	62941-60	✓	✓				✓		
	Cover back Cross mod 3 37.5 cm (15") dark grey	62942-60	✓	✓				✓		
	Cover back Cross mod 3 40 cm (16") dark grey	62943-60	✓	✓				✓		
	Cover back Cross mod 3 42.5 cm (17") dark grey	62944-60	✓	✓				✓		
	Cover back Cross mod 3 45 cm (18") dark grey	62945-60	✓	✓				✓		
	Cover back Cross mod 3 47.5 cm (19") dark grey	62946-60	✓	✓	✓			✓		
	Cover back Cross mod 3 50 cm (20") dark grey	62947-60	✓	✓	✓			✓		
	Cover back Cross mod 3 52.5 cm (21") dark grey	62948-60	✓	✓	✓					
	Cover back Cross mod 3 55 cm (22") dark grey	62949-60			✓					
	Cover back Cross mod 3 57.5 cm (23") dark grey	62950-60			✓					
	Cover back Cross mod 3 60 cm (24") dark grey	62951-60			✓					
2	Cover back Cross Comfort mod 3 35 cm (14") dark grey	62956-60	✓	✓						
	Cover back Cross Comfort mod 3 37.5 cm (15") dark grey	62957-60	✓	✓						
	Cover back Cross Comfort mod 3 40 cm (16") dark grey	62958-60	✓	✓						
	Cover back Cross Comfort mod 3 42.5 cm (17") dark grey	62959-60	✓	✓						
	Cover back Cross Comfort mod 3 45 cm (18") dark grey	62960-60	✓	✓						
	Cover back Cross Comfort mod 3 47.5 cm (19") dark grey	62961-60	✓	✓	✓					
	Cover back Cross Comfort mod 3 50 cm (20") dark grey	62962-60	✓	✓	✓					
	Cover back Cross Comfort mod 3 52.5 cm (21") dark grey	62963-60	✓	✓	✓					
	Cover back Cross Comfort mod 3 55 cm (22") dark grey	62964-60			✓					
	Cover back Cross Comfort mod 3 57.5 cm (23") dark grey	62965-60			✓					
	Cover back Cross Comfort mod 3 60 cm (24") dark grey	62966-60			✓					

Pos.	Description	Item. No.	Cross 6	Cross 5	Cross 5 XL	Prio	Transit	Xact	Crissy Active	Crissy Sw-Aw.
3	Cover back Cross mod 3 Tidy 35 cm (14")	63087-63	✓	✓						
	Cover back Cross mod 3 Tidy 37,5 cm (15")	63088-63	✓	✓						
	Cover back Cross mod 3 Tidy 40 cm (16")	63089-63	✓	✓						
	Cover back Cross mod 3 Tidy 42,5 cm (17")	63090-63	✓	✓						
	Cover back Cross mod 3 Tidy 45 cm (18")	63091-63	✓	✓						
	Cover back Cross mod 3 Tidy 47,5 cm (19")	63092-63	✓	✓	✓					
	Cover back Cross mod 3 Tidy 50 cm (20")	63093-63	✓	✓	✓					
	Cover back Cross mod 3 Tidy 52,5 cm (21")	63094-63	✓		✓					
	Cover back Cross mod 3 Tidy 55 cm (22")	63095-63			✓					
	Cover back Cross mod 3 Tidy 57,5 cm (23")	63096-63			✓					
	Cover back Cross mod 3 Tidy 60 cm (24")	63097-63			✓					
4	Foam cover upholstery Tidy mod 3 35 cm (14")	82877	✓	✓						
	Foam cover upholstery Tidy mod 3 37.5 cm (15")	82878	✓	✓						
	Foam cover upholstery Tidy mod 3 40 cm (16")	82879	✓	✓						
	Foam cover upholstery Tidy mod 3 42.5 cm (17")	82880	✓	✓						
	Foam cover upholstery Tidy mod 3 45 cm (18")	82881	✓	✓						
	Foam cover upholstery Tidy mod 3 47.5 cm (19")	82882	✓	✓	✓					
	Foam cover upholstery Tidy mod 3 50 cm (20")	82883	✓	✓	✓					
	Foam cover upholstery Tidy mod 3 52.5 cm (21")	82884	✓		✓					
	Foam cover upholstery Tidy mod 3 55 cm (22")	82885			✓					
	Foam cover upholstery Tidy mod 3 57.5 cm (23")	82886			✓					
	Foam cover upholstery Tidy mod 3 60 cm (24")	82887			✓					

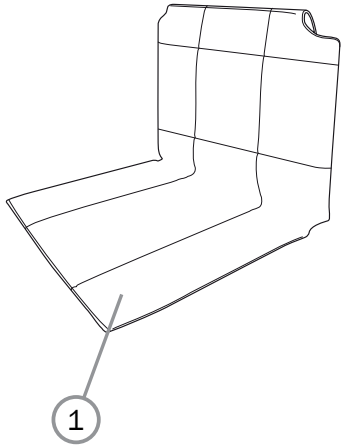

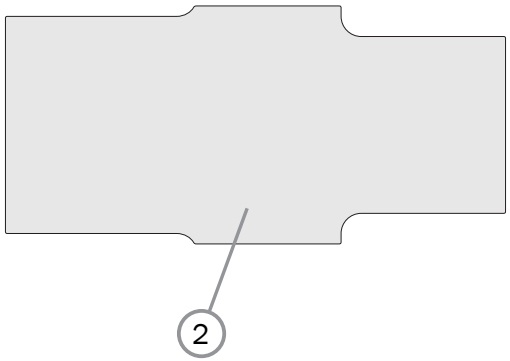

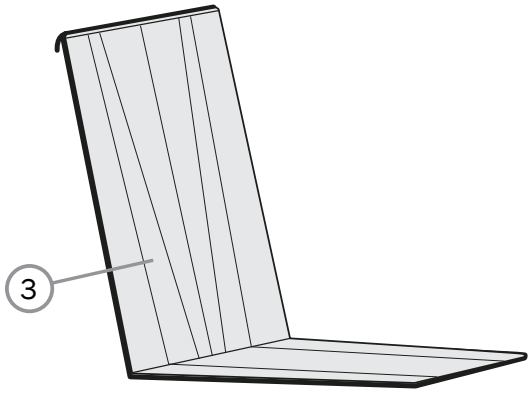

Pos.	Description	Item. No.	Cross 6	Cross 5	Cross 5 XL	Prio	Transit	Xact	Crissy Active	Crissy Sw-Aw.
1	Cover back Cross 3A high 35 cm dark grey	63020-60	✓	✓				✓		
	Cover back Cross 3A high 37.5 cm dark grey	63021-60	✓	✓				✓		
	Cover back Cross 3A high 40 cm dark grey	63022-60	✓	✓				✓		
	Cover back Cross 3A high 42,5 cm dark grey	63023-60	✓	✓				✓		
	Cover back Cross 3A high 45 cm dark grey	63024-60	✓	✓				✓		
	Cover back Cross 3A high 47,5 cm dark grey	63025-60	✓	✓	✓			✓		
	Cover back Cross 3A high 50 cm dark grey	63026-60	✓	✓	✓			✓		
	Cover back Cross 3A high 52,5 cm dark grey	63027-60	✓	✓	✓					
	Cover back Cross 3A high 55 cm dark grey	63028-60			✓					
	Cover back Cross 3A high 57,5 cm dark grey	63029-60			✓					
	Cover back Cross 3A high 60 cm dark grey	63030-60			✓					
2	Cover back Cross 3A comfort high 35 cm dark grey	63033-60	✓	✓						
	Cover back Cross 3A comfort high 37,5 cm dark grey	63034-60	✓	✓						
	Cover back Cross 3A comfort high 40 cm dark grey	63035-60	✓	✓						
	Cover back Cross 3A comfort high 42,5 cm dark grey	63036-60	✓	✓						
	Cover back Cross 3A comfort high 45 cm dark grey	63037-60	✓	✓						
	Cover back Cross 3A comfort high 47,5 cm dark grey	63038-60	✓	✓	✓					
	Cover back Cross 3A comfort high 50 cm dark grey	63039-60	✓	✓	✓					
	Cover back Cross 3A comfort high 52,5 cm dark grey	63040-60	✓	✓	✓					
	Cover back Cross 3A comfort high 55 cm dark grey	63041-60			✓					
	Cover back Cross 3A comfort high 57,5 cm dark grey	63042-60			✓					
	Cover back Cross 3A comfort high 60 cm dark grey	63043-60			✓					
3	Cover back support W40 plush	63339-60				✓				
	Cover back support W45 plush	63340-60				✓				
	Cover back support W50 plush	63341-60				✓				
	Cover back support W55 plush	63342-60				✓				

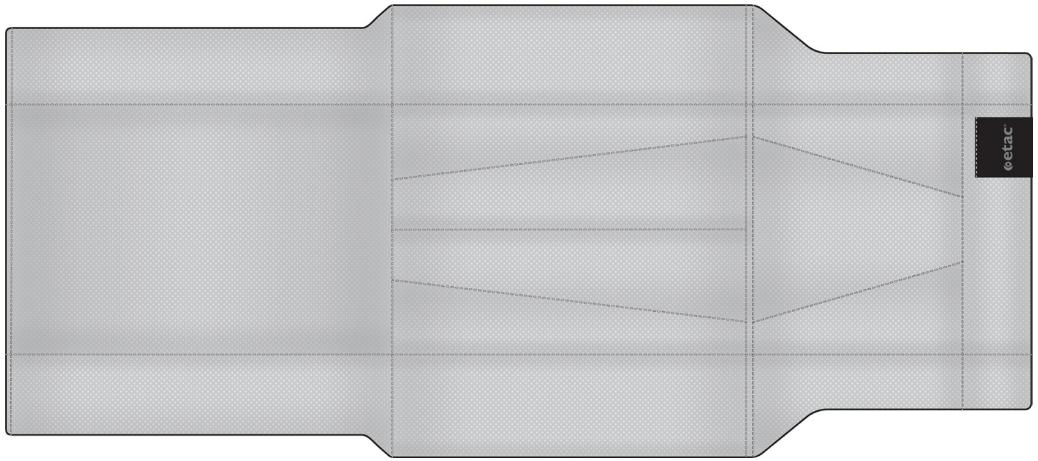

Pos.	Description	Item. No.	Cross 6	Cross 5	Cross 5 XL	Prio	Transit	Xact	Crissy Active	Crissy Sw-Aw.
1	Cover back 3A/2B 35 cm Airmesh	63204-68	✓	✓				✓		
	Cover back 3A/2B 37.5 cm Airmesh	63205-68	✓	✓				✓	✓	✓
	Cover back 3A/2B 40 cm Airmesh	63206-68	✓	✓				✓	✓	✓
	Cover back 3A/2B 42.5 cm Airmesh	63207-68	✓	✓				✓	✓	✓
	Cover back 3A/2B 45 cm Airmesh	63208-68	✓	✓				✓	✓	✓
	Cover back 3A/2B 47.5 cm Airmesh	63209-68	✓	✓				✓	✓	✓
	Cover back 3A/2B 50 cm Airmesh	63210-68	✓	✓				✓	✓	✓
	Cover back 3A/2B 52.5 cm Airmesh	63211-68	✓	✓						
	Cover back 3A/2B 55 cm Airmesh	63212-68		✓						
	Cover back 3A/2B 57.5 cm Airmesh	63213-68		✓						
	Cover back 3A/2B 60 cm Airmesh	63214-68		✓						

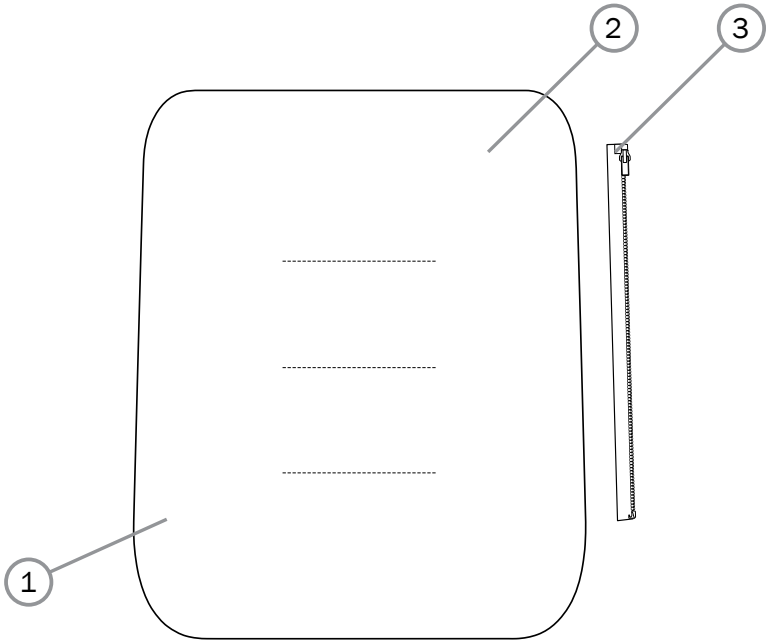

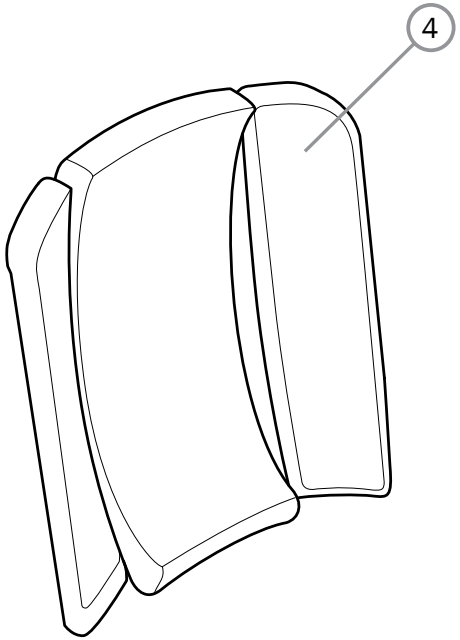

Pos.	Description	Item. No.	Cross 6	Cross 5	Cross 5 XL	Prio	Transit	Xact	Crissy Active	Crissy Sw-Aw.
1	Back support cushion 40 cm plush Prio excl zipper	28410-60				✓				
	Back support cushion 40 cm hygiene Prio grey excl zipper	28410-65				✓				
	Back support cushion 45 cm plush Prio excl zipper	28411-60				✓				
	Back support cushion 45 cm hygiene Prio grey excl zipper	28411-65				✓				
	Back support cushion 50 cm plush Prio excl zipper	28412-60				✓				
	Back support cushion 50 cm hygiene Prio grey excl zipper	28412-65				✓				
	Back support cushion 55 cm plush Prio excl zipper	28413-60				✓				
	Back support cushion 55 cm hygiene Prio grey excl zipper	28413-65				✓				
2	Cover back support plush Prio 40 cm grey excl zipper	63230-60				✓				
	Cover back support hygiene Prio 40 cm grey excl zipper	63230-65				✓				
	Cover back support plush Prio 45 cm grey excl zipper	63231-60				✓				
	Cover back support hygiene Prio 45 cm grey excl zipper	63231-65				✓				
	Cover back support plush Prio 50 cm grey excl zipper	63232-60				✓				
	Cover back support hygiene Prio 50 cm grey excl zipper	63232-65				✓				
	Cover back support plush Prio 55 cm grey excl zipper	63233-60				✓				
	Cover back support hygiene Prio 55 cm grey excl zipper	63233-65				✓				
3	Velcro attachment back Prio	83188				✓				
4	Back support cushion B40 3D plush	63343-60				✓				
	Back support cushion B45 3D plush	63344-60				✓				
	Back support cushion B50 3D plush	63345-60				✓				
	Back support cushion B55 3D plush	63346-60				✓				

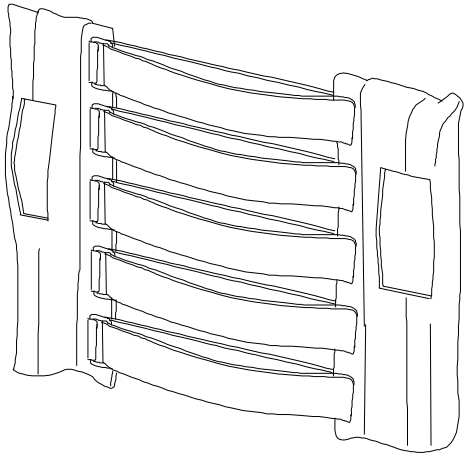

Pos.	Description	Item. No.	Cross 6	Cross 5	Cross 5 XL	Prio	Transit	Xact	Crissy Active	Crissy Sw-Aw.
1	Upholstery back 2C adj 35/37.5 cm	63317-60	✓	✓					✓	✓
	Upholstery back 2C adj 40/42.5 cm	63318-60	✓	✓					✓	✓
	Upholstery back 2C adj 45 cm	63319-60	✓	✓					✓	✓
	Upholstery back 2C adj 47.5/50 cm	63320-60	✓	✓	✓				✓	✓
	Upholstery back 2C adj 52.5/55 cm	63321-60	✓	✓	✓					
	Upholstery back 2C adj 55/57.5 cm	63322-60			✓					
	Upholstery back M100/Twin adj 35-37.5 cm male velcro	63323-60					✓			
	Upholstery back M100/Twin adj 40-42.5 cm male velcro	63324-60					✓			
	Upholstery back M100/Twin adj 45 cm male velcro	63325-60					✓			
	Upholstery back M100/Twin adj 47.5-50 cm male velcro	63326-60					✓			
	Upholstery back 2C adj high 35/37.5 cm	63327-60	✓	✓					✓	✓
	Upholstery back 2C adj high 40/42.5 cm	63328-60	✓	✓					✓	✓
	Upholstery back 2C adj high 45 cm	63329-60	✓	✓					✓	✓
	Upholstery back 2C adj high 47.5/50 cm	63330-60	✓	✓	✓				✓	✓

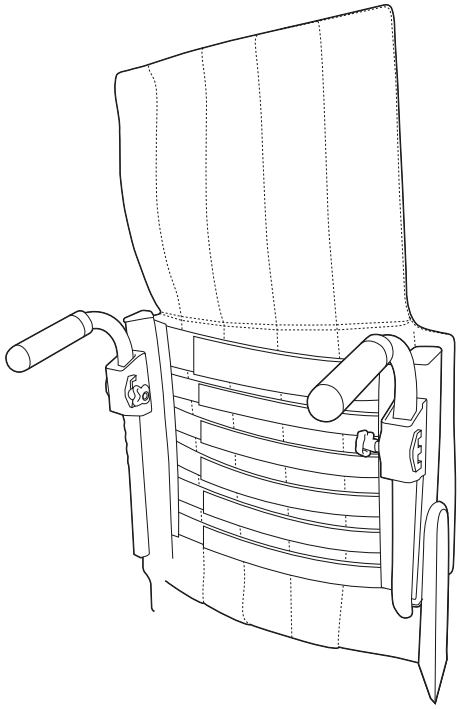

Pos.	Description	Item. No.	Cross 6	Cross 5	Cross 5 XL	Prio	Transit	Xact	Crissy Active	Crissy Sw-Aw.
1	Upholstery back Cross adj mod 3 rh adj 35-40 cm (14"-16")	62953-60	✓	✓						
	Upholstery back Cross adj mod 3 rh jb 42.5-50 cm (17"-20")	62954-60	✓	✓	✓					
	Upholstery back Cross adj mod 3 rh jb 52.5-60 cm (21"-24")	62955-60	✓		✓					
	Tension rod L296 Cross back mod 3	82461	✓	✓	✓					
	Upholstery back Cross 3A adj high 35-40 cm (14"-16")	63014-60	✓	✓						
	Upholstery back Cross 3A adj high 42.5-50 cm (17"-20")	63015-60	✓	✓	✓					
	Upholstery back Cross 3A adj high 52.5-60 cm (21"-24")	63016-60	✓		✓					
	Tension rod L355 Cross 3A high back support	82586	✓	✓	✓					

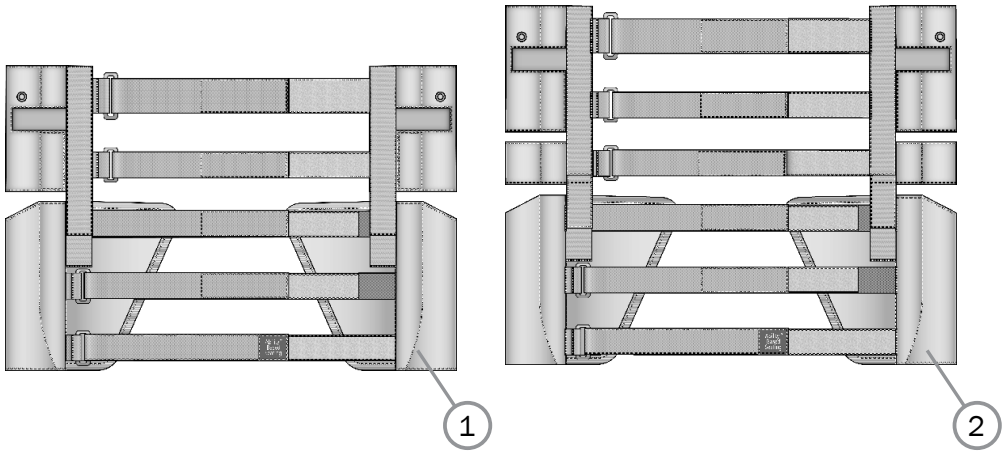

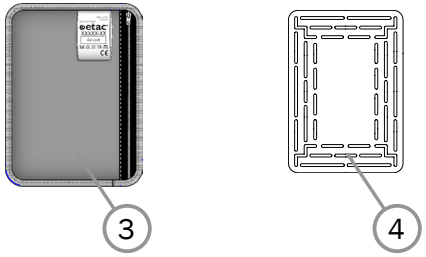

Pos.	Description	Item. No.	Cross 6	Cross 5	Cross 5 XL	Prio	Transit	Xact	Crissy Active	Crissy Sw-Aw.
1	Upholstery back B2B adj 35-40 cm	63257-60	✓	✓					✓	✓
	Upholstery back B2B adj 42.5-50 cm	63258-60	✓	✓					✓	✓
	Upholstery back B2B adj 52.5-60 cm	63259-60	✓	✓					✓	✓
2	Upholstry back B2B high 35-40 cm	63260-60	✓	✓					✓	✓
	Upholstry back B2B high 42.5-50 cm	63261-60	✓	✓					✓	✓
	Upholstry back B2B high 52.5-60 cm	63262-60	✓	✓					✓	✓
3	Pad size 20x15x1 cm	63272	✓	✓					✓	✓
4	Insert widening pad	51218	✓	✓					✓	✓
3-4	Widening pad	28637	✓	✓					✓	✓

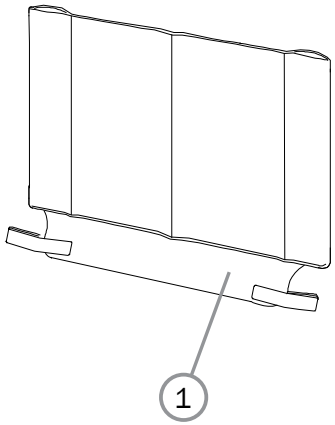

Pos.	Description	Item. No.	Cross 6	Cross 5	Cross 5 XL	Prio	Transit	Xact	Crissy Active	Crissy Sw-Aw.
1	Upholstery back Twin fixed 35 cm	62381-70					✓			
	Upholstery back Twin fixed 40 cm	62382-70					✓			
	Upholstery back Twin fixed 45 cm	62383-70					✓			
	Upholstery back Twin fixed 50 cm	62384-70					✓			

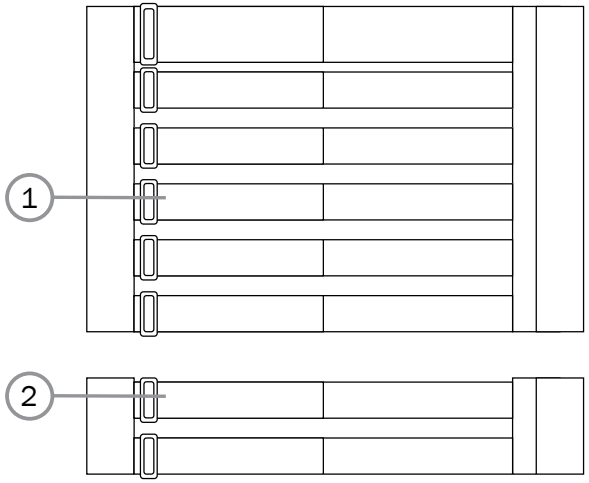

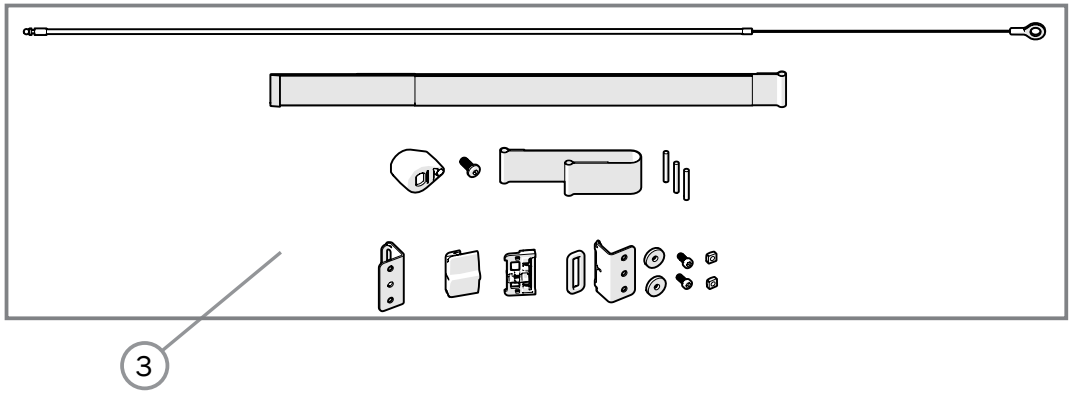

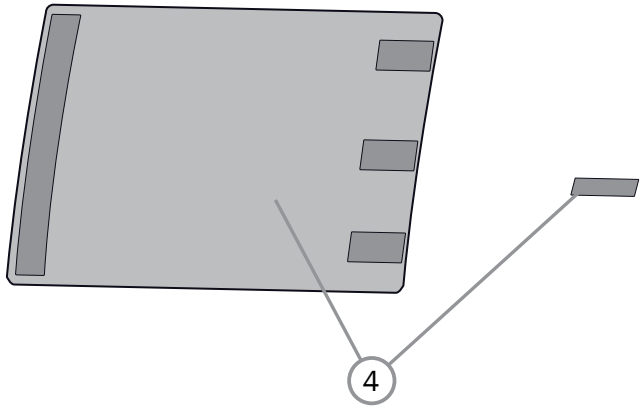

Pos.	Description	Item. No.	Cross 6	Cross 5	Cross 5 XL	Prio	Transit	Xact	Crissy Active	Crissy Sw-Aw.
1	Upholstery back 42.5-50 cm	62954-60				✓				
	Upholstery back 52.5-60 cm	62955-60				✓				
2	Upholstery back 3A adj lower 40-45 cm	63337-60				✓				
	Upholstery back 3A adj lower 50-55 cm	63338-60				✓				
3	Pelvic support dynamic Prio 40 cm	28704				✓				
	Pelvic support dynamic Prio 45 cm	28705				✓				
	Pelvic support dynamic Prio 50/55 cm	28999				✓				
4	Extension back upholstery cpl	28657				✓				

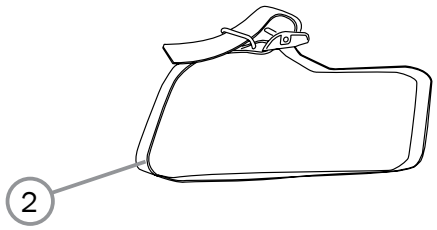

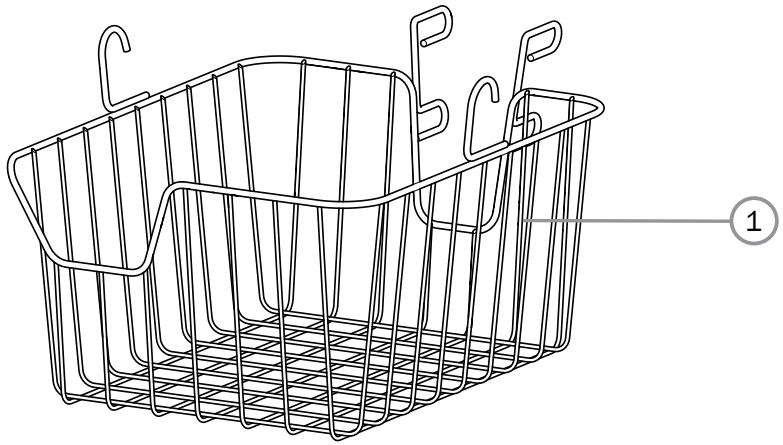

Pos.	Description	Item. No.	Cross 6	Cross 5	Cross 5 XL	Prio	Transit	Xact	Crissy Active	Crissy Sw-Aw.
1	Basket					✓				
2	Strap	80459				✓				
1-2	Basket compl Prio mod 2	28316				✓				

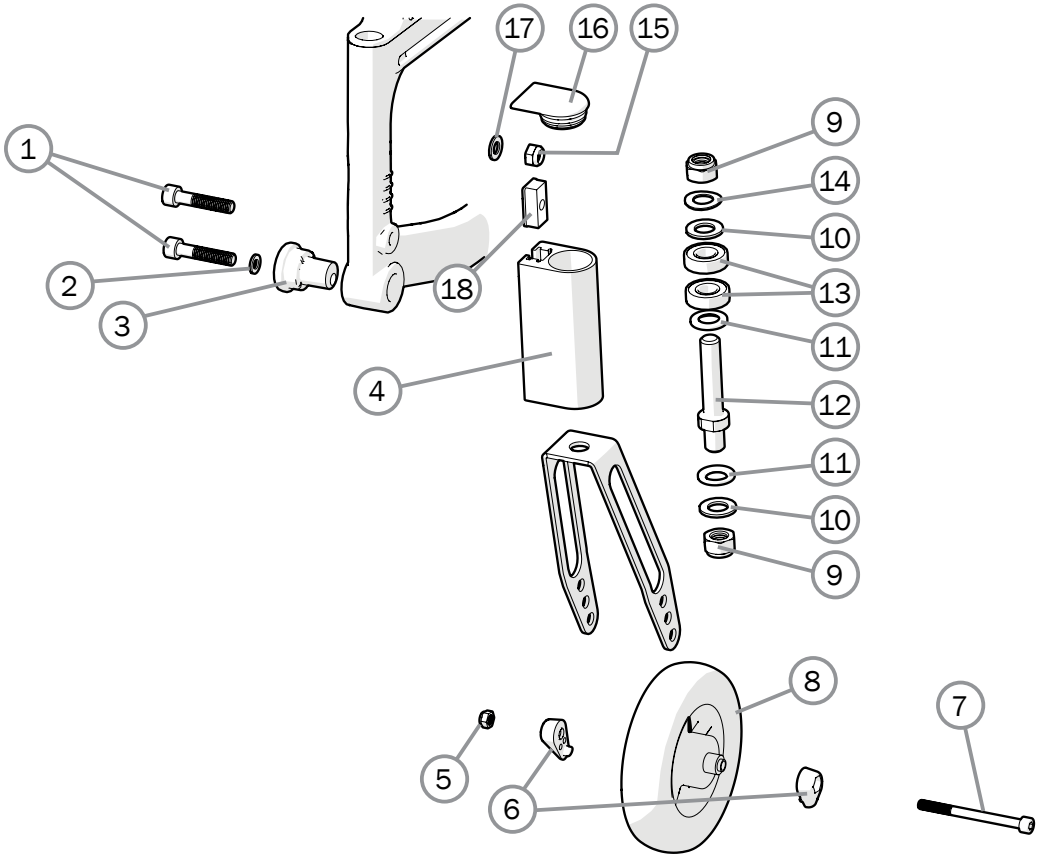

Pos.	Description	Art. No.	Cross 6	Cross 5	Cross 5 XL	Prio	Transit	Xact	Crissy Active	Crissy Sw-Aw.
1	Screw M8x1x40 MC6S 12.9 Zn8/P4	11305	✓			✓	✓		✓	✓
2	Washer	13092	✓			✓	✓		✓	✓
3	Off center sleeve jagged	81994	✓				✓		✓	✓
1, 4, 9-11, 13-18	Front fork housing Cross	28147	✓				✓		✓	✓
	Front fork housing extended	25763	✓			✓	✓		✓	✓
	Front fork housing low Cross	28633	✓						✓	✓
5	Locking nut M 6 Zn8/P4	12035	✓			✓	✓		✓	✓
6	Cover axle wheel	51284	✓			✓	✓		✓	✓
	Cover axle wheel (50 pcs)	28966	✓			✓	✓		✓	✓
7	Screw M6x75 MC6S 12.9 black chrome	11338	✓			✓	✓		✓	✓
8	Castor		✓							
5-8	Castor 4" 100x30 solid hard	27870	✓							
	Castor 5" 125x30 solid hard	27865	✓						✓	✓
	Castor 6" 150x30 solid soft	27863	✓			✓			✓	✓
	Castor 6" 150x30 solid hard	27869	✓							
	Castor 6.5" 165x30 solid hard	27866	✓			✓				
	Castor 7” 175x45 solid soft	27867				✓	✓			
	Castor 8" 200x35 solid soft	27864	✓			✓			✓	✓
	Castor 8" 200x50 solid soft	27868	✓			✓	✓		✓	✓
9	Locking nut 1/2 UNF low	12077	✓			✓	✓		✓	✓
10	Washer BRB 13.5 Zn8/P4	13031	✓			✓	✓		✓	✓
11	Washer 12.7x24x2.5	13032	✓			✓	✓		✓	✓
12	Axle front fork steel	83128	✓			✓	✓		✓	✓
13	Ball bearing 1/2 EE4 2RS	80244	✓			✓	✓		✓	✓
14	Washer 13x24x1.2 DIN 137B zink plated	13040	✓			✓	✓		✓	✓
15	Locking nut M 8x 1 DIN 985 zink plated	12051	✓				✓		✓	✓
16	Plug front fork housing	51220	✓			✓	✓		✓	✓
17	Plug for extended front fork housing	50429	✓			✓	✓		✓	✓
	Washer BRB 8.4x 16x 1.6 zink plated	13001	✓				✓		✓	✓
18	T-nut	82922	✓			✓	✓		✓	✓

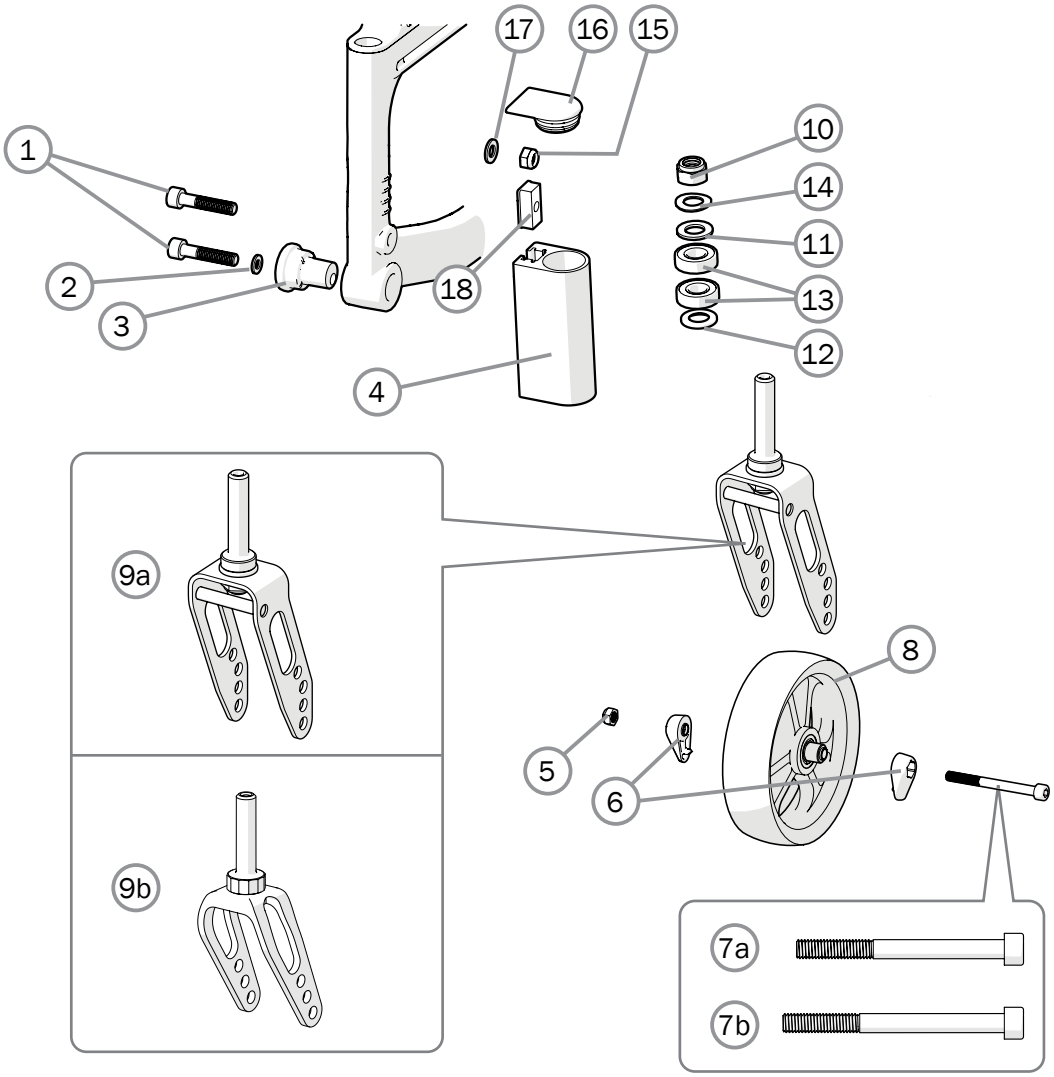

Pos.	Description	Art. No.	Cross 6	Cross 5	Cross 5 XL	Prio	Transit	Xact	Crissy Active	Crissy Sw-Aw.
1	Screw M8x1x40 MC6S 12.9 Zn8/P4	11305	✓			✓	✓		✓	✓
2	Washer	13092	✓			✓	✓		✓	✓
3	Off center sleeve jagged	81994	✓				✓		✓	✓
1, 4, 10-18	Front fork housing H142	28968	✓							
	Front fork housing Cross	28147	✓				✓			
	Front fork housing extended	25763	✓			✓	✓			
	Front fork housing low Cross	28633	✓							
	Front fork housing H65	28967							✓	✓
5	Locking nut M6 Zn8/P4	12035	✓			✓	✓		✓	✓
6	Cover axle wheel	51284	✓			✓			✓	✓
	Cover axle wheel (50 pcs)	28966	✓			✓			✓	✓
7a	Screw M6x60 MC6S Zn8/P4, for steel front fork	11408	✓			✓	✓			
7b	Screw M6x65 MC6S 12.9 ZnP4, for aluminium front fork	11236	✓						✓	✓
8	Castor		✓						✓	✓
5-6, 8	Castor 4 100x34 cpl	28919	✓							
	Castor 5 125x34 cpl	27299							✓	✓
	Castor 5 125x28 cpl	28921	✓						✓	✓
	Castor 6 150x34 cpl	28922	✓			✓			✓	✓
	Castor 7 175x34 cpl	24045					✓			
	Castor 8 200x38 cpl	28526	✓			✓	✓		✓	✓
9a	Front fork steel S w axle	24038	✓			✓				
	Front fork steel M w axle	28969	✓			✓	✓			
9b	Front fork alu XS w axle	28923	✓						✓	✓
10	Locking nut 1/2 UNF low	12077	✓			✓	✓		✓	✓
11	Washer BRB 13.5 Zn8/P4	13031	✓			✓	✓		✓	✓
12	Washer 12.7x24x2.5	13032	✓			✓	✓		✓	✓
13	Ball bearing 1/2 EE4 2RS	80244	✓			✓	✓		✓	✓
14	Washer 13x24x1.2 DIN 137B zink plated	13040	✓			✓	✓		✓	✓
15	Locking nut M8x1 DIN 985 zink plated	12051	✓			✓	✓		✓	✓
16	Plug front fork housing	51220	✓			✓	✓		✓	✓
	Plug for extended front fork housing	50429	✓			✓	✓		✓	✓
17	Washer BRB 8.4x16x1.6 zink plated	13001	✓			✓	✓		✓	✓
18	T-nut	82922	✓			✓	✓		✓	✓

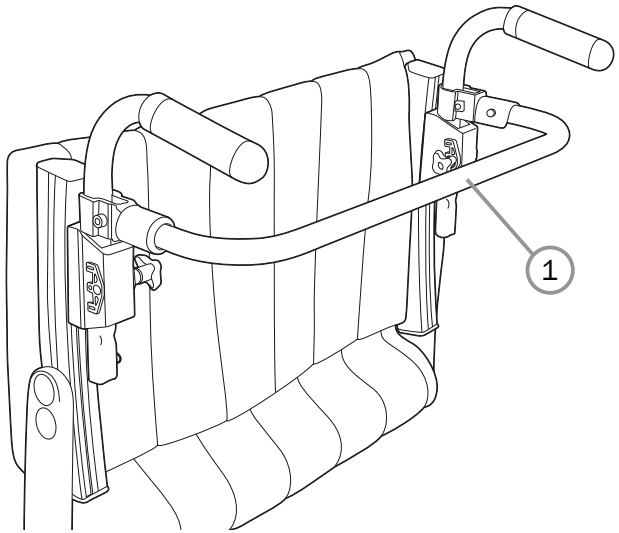

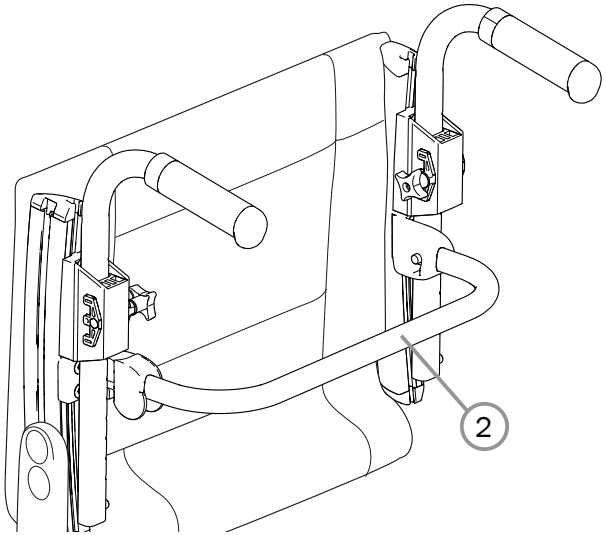

Pos.	Description	Item. No.	Cross 6	Cross 5	Cross 5 XL	Prio	Transit	Xact	Crissy Active	Crissy Sw-Aw.
1	Crossbar back 32.5 cm. 35 cm back 3A cpl*	27431	✓	✓						
	Crossbar back 35 cm Cross back 2. 37.5 cm back 3A cpl*	25610	✓	✓						
	Crossbar back 37.5 cm Cross back 2. 40 cm back 3A cpl*	25611	✓	✓					✓	✓
	Crossbar back 40 cm Cross back 2. 42.5 cm back 3A cpl*	25612	✓	✓					✓	✓
	Crossbar back 42.5 cm Cross back 2. 45 cm back 3A cpl*	25613	✓	✓					✓	✓
	Crossbar back 45 cm Cross back 2. 47.5 cm back 3A cpl*	25614	✓	✓	✓				✓	✓
	Crossbar back 47.5 cm Cross back 2. 50 cm back 3A cpl*	25739	✓	✓	✓				✓	✓
	Crossbar back 50 cm Cross back 2. 52.5 cm back 3A cpl*	25615	✓		✓				✓	✓
	Crossbar back 52.5 cm Cross back 2. 55 back 3A compl*	26030			✓					
	Crossbar back 55 cm Cross back 2. 57.5 back 3A compl*	26031			✓					
	Crossbar back 57.5 cm Cross back 2. 60 back 3A compl*	26032			✓					
	*The larger width dimension applies to Cross 6, Cross 5 and Cross 5XL with back support 3A									
2	Crossbar back 3A 35 cm compl mod 4	28114	✓	✓						
	Crossbar back 3A 37,5 cm compl mod 4	28115	✓	✓						
	Crossbar back 3A 40 cm compl mod 4	28116	✓	✓						
	Crossbar back 3A 42,5 cm compl mod 4	28117	✓	✓						
	Crossbar back 3A 45 cm compl mod 4	28118	✓	✓						
	Crossbar back 3A 47,5 cm compl mod 4	28695	✓	✓	✓					
	Crossbar back 3A 50 cm compl mod 4	28696	✓	✓	✓					
	Crossbar back 3A 52,5 cm compl mod 4	28697	✓	✓	✓					
	Crossbar back 3A 55 cm compl mod 4	28698		✓	✓					
	Crossbar back 3A 57,5 cm compl mod 4	28699		✓	✓					
	Crossbar back 3A 60 cm compl mod 4	28700			✓					

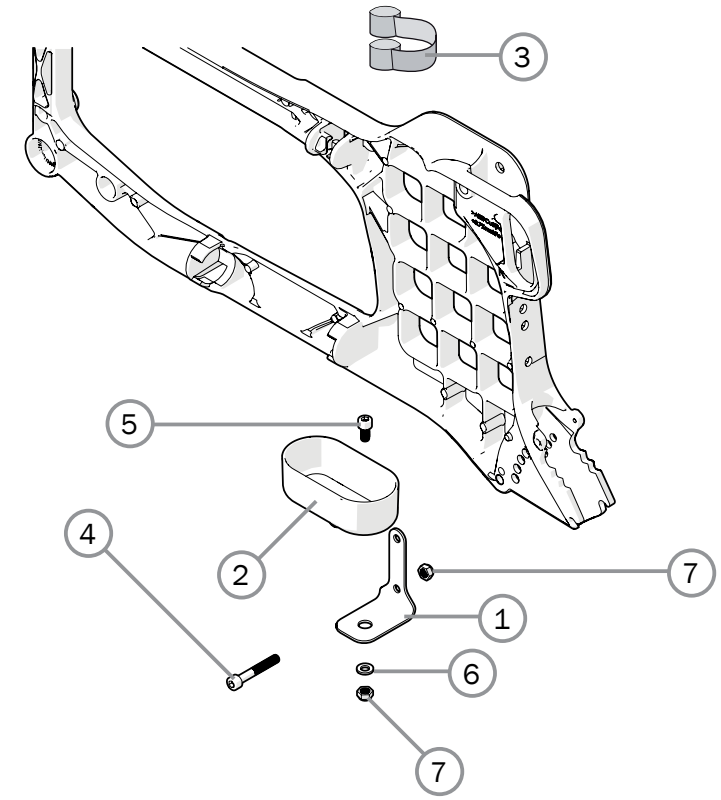

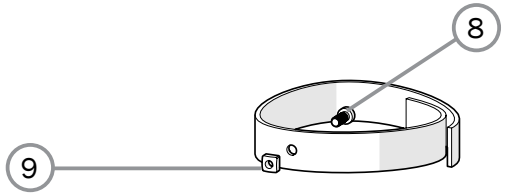

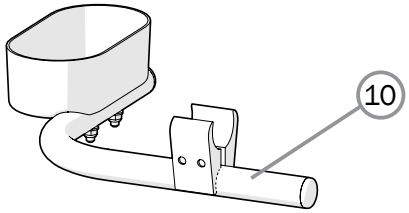

Pos.	Description	Item. No.	Cross 6	Cross 5	Cross 5 XL	Prio	Transit	Xact	Crissy Active	Crissy Sw-Aw.
1	Bracket cane holder	82390	✓	✓	✓	✓	✓			
2	Cane holder M100	50866	✓	✓	✓	✓	✓		✓	✓
3	Elastic ribbon Cross black	80621	✓	✓	✓	✓	✓			
4a	Screw M6x40 MC6S zink plated	11229	✓	✓	✓	✓	✓			
4b	Screw M6x14 MC6S black	11420	✓	✓	✓	✓	✓			
5	Screw M6x12 MC6S 8.8 zink plated	11577	✓	✓	✓	✓	✓			
6	Washer 6.4x14x1.5 DIN 134 black	13058	✓	✓	✓	✓	✓			
7	Locking nut M6 zink plated	12017	✓	✓	✓	✓	✓		✓	✓
8	Screw MC6LS 6x14 SW=5 black							✓		
9	Scuare nut high M6							✓		
10	Cane holder							✓		
1-7	Cane holder universal compl	27327	✓	✓	✓	✓	✓			
	Cane holder M11 compl	27235							✓	✓
	Crutch and cane holder cpl Xact	28932						✓		

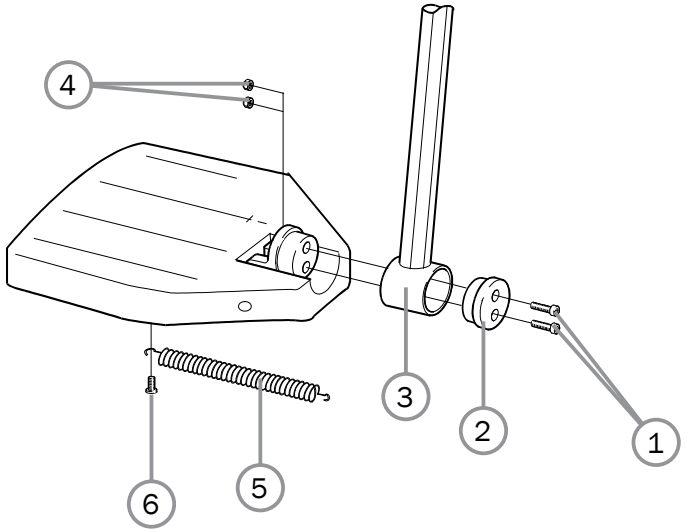

Pos.	Description	Item. No.	Cross 6	Cross 5	Cross 5 XL	Prio	Transit	Xact	Crissy Active	Crissy Sw-Aw.
1	Screw M6x25 MC6S 8.8 zink plated	11033	✓	✓	✓	✓	✓	✓	✓	✓
2	Locking block foot support	20324	✓	✓	✓	✓	✓	✓	✓	✓
3	Attachment tube foot support xshort c/c 15 mm black	82603	✓	✓						
	Attachment tube foot support adj short	81999	✓	✓				✓		
	Attachment tube foot support adj	81997	✓	✓	✓	✓	✓	✓	✓	✓
	Attachment tube foot support adj long	81998	✓	✓	✓	✓			✓	✓
4	Locking nut M6 zink plated	12017	✓	✓	✓	✓	✓	✓	✓	✓
5	Spring footplate Cross	80619	✓	✓	✓	✓	✓	✓	✓	✓
6	Screw K40x8 PT-KX PHIL WN 1442 zink plated	11344	✓	✓	✓	✓	✓	✓	✓	✓

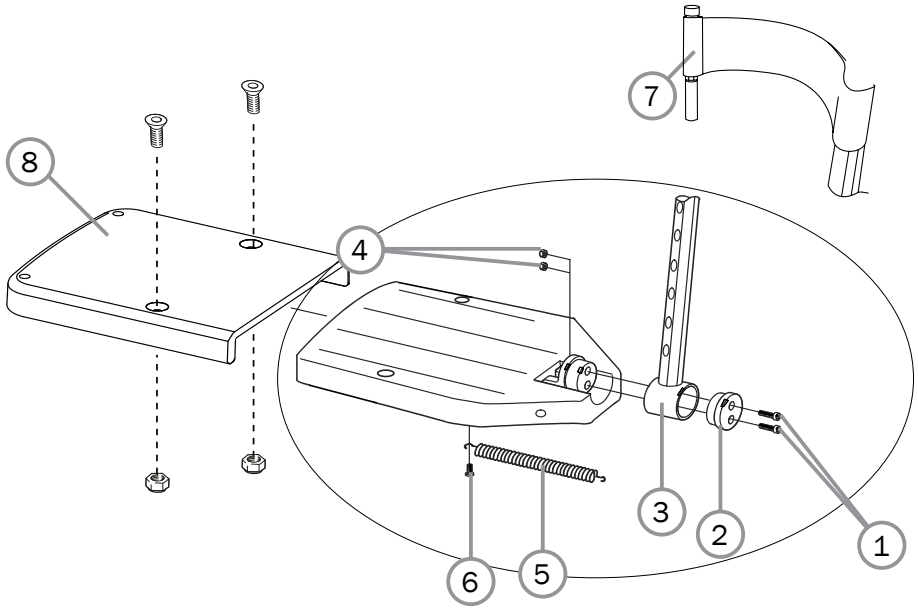

Pos.	Description	Item. No.	Cross 6	Cross 5	Cross 5 XL	Prio	Transit	Xact	Crissy Active	Crissy Sw-Aw.
1-6	(Foot support with std attachment tube 25 cm, 81997")									
	Foot support standard 35 cm (14") right	25641-1	✓	✓			✓	✓		
	Foot support standard 35 cm (14") left	25641-2	✓	✓			✓	✓		
	Foot support standard 37.5 cm (15") right	25642-1	✓	✓				✓	✓	✓
	Foot support standard 37.5 cm (15") left	25642-2	✓	✓				✓	✓	✓
	Foot support standard 40 cm (16") right	25643-1	✓	✓			✓	✓	✓	✓
	Foot support standard 40 cm (16") left	25643-2	✓	✓			✓	✓	✓	✓
	Foot support standard 42.5 cm (17") right	25644-1	✓	✓		✓		✓	✓	✓
	Foot support standard 42.5 cm (17") left	25644-2	✓	✓		✓		✓	✓	✓
	Foot support standard 45 cm (18") right	25645-1	✓	✓			✓	✓	✓	✓
	Foot support standard 45 cm (18") left	25645-2	✓	✓			✓	✓	✓	✓
	Foot support standard 47.5 cm (19") right	25736-1	✓	✓	✓	✓		✓	✓	✓
	Foot support standard 47.5 cm (19") left	25736-2	✓	✓	✓	✓		✓	✓	✓
	Foot support standard 50 cm (20") right	25646-1	✓	✓	✓	✓	✓	✓	✓	✓
	Foot support standard 50 cm (20") left	25646-2	✓	✓	✓	✓	✓	✓	✓	✓
1-6	(Foot support with short attachment tube -8 cm, 81999)									
	Foot support short 35 cm (14") right	25653-1	✓	✓			✓	✓		
	Foot support short 35 cm (14") left	25653-2	✓	✓			✓	✓		
	Foot support short 37.5 cm (15") right	25654-1	✓	✓				✓		
	Foot support short 37.5 cm (15") left	25654-2	✓	✓				✓		
	Foot support short 40 cm (16") right	25655-1	✓	✓			✓	✓		
	Foot support short 40 cm (16") left	25655-2	✓	✓			✓	✓		
	Foot support short 42.5 cm (17") right	25656-1	✓	✓				✓		
	Foot support short 42.5 cm (17") left	25656-2	✓	✓				✓		
	Foot support short 45 cm (18") right	25657-1	✓	✓			✓	✓		
	Foot support short 45 cm (18") left	25657-2	✓	✓			✓	✓		
	Foot support short 47.5 cm (19") right	25738-1	✓	✓	✓			✓		
	Foot support short 47.5 cm (19") left	25738-2	✓	✓	✓			✓		
	Foot support short 50 cm (20") right	25658-1	✓	✓	✓		✓	✓		
	Foot support short 50 cm (20") left	25658-2	✓	✓	✓		✓	✓		

Pos.	Description	Item. No.	Cross 6	Cross 5	Cross 5 XL	Prio	Transit	Xact	Crissy Active	Crissy Sw-Aw.
1-6	(Foot support with long attachment +10 cm, 81998)									
	Foot support long 35 cm (14") right	25647-1	✓	✓						
	Foot support long 35 cm (14") left	25647-2	✓	✓						
	Foot support long 37.5 cm (15") right	25648-1	✓	✓					✓	✓
	Foot support long 37.5 cm (15") left	25648-2	✓	✓					✓	✓
	Foot support long 40 cm (16") right	25649-1	✓	✓					✓	✓
	Foot support long 40 cm (16") left	25649-2	✓	✓					✓	✓
	Foot support long 42.5 cm (17") right	25650-1	✓	✓		✓			✓	✓
	Foot support long 42.5 cm (17") left	25650-2	✓	✓		✓			✓	✓
	Foot support long 45 cm (18") right	25651-1	✓	✓					✓	✓
	Foot support long 45 cm (18") left	25651-2	✓	✓					✓	✓
	Foot support long 47.5 cm (19") right	25737-1	✓	✓	✓	✓			✓	✓
	Foot support long 47.5 cm (19") left	25737-2	✓	✓	✓	✓			✓	✓
	Foot support long 50 cm (20") right	25652-1	✓	✓	✓	✓			✓	✓
	Foot support long 50 cm (20") left	25652-2	✓	✓	✓	✓			✓	✓
7	Heel straps	24458	✓	✓	✓	✓	✓	✓	✓	✓
8	Foot support extended Cross XL 52.5-57.5	28443			✓					

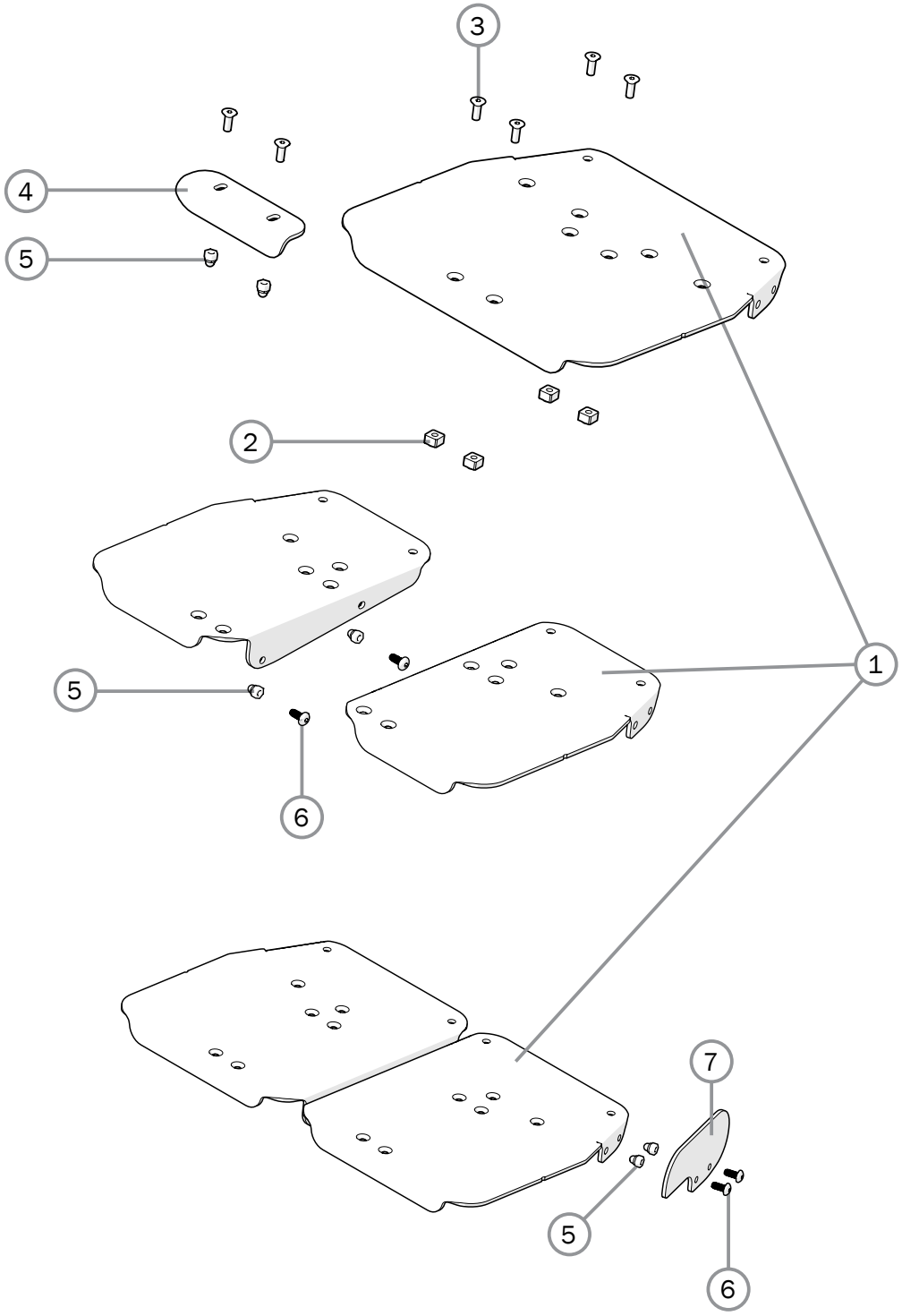

Pos.	Description	Item. no.	Cross 6	Cross 5	Cross 5 XL	Prio	Transit	Xact	Crissy Active	Crissy Sw-Aw.
1-6	Extender footplate S cpl	28774	✓	✓	✓			✓	✓	✓
	Extender footplate M right	28775-1	✓	✓	✓	✓		✓	✓	✓
	Extender footplate M left	28775-2	✓	✓	✓	✓		✓	✓	✓
	Extender footplate L right	28776-1	✓	✓	✓	✓		✓	✓	✓
	Extender footplate L left	28776-2	✓	✓	✓	✓		✓	✓	✓
1	Extender footplate S		✓	✓	✓			✓	✓	✓
	Extender footplate M right		✓	✓	✓	✓		✓	✓	✓
	Extender footplate M left		✓	✓	✓	✓		✓	✓	✓
	Extender footplate L right		✓	✓	✓	✓		✓	✓	✓
	Extender footplate L left		✓	✓	✓	✓		✓	✓	✓
2	Stop bar arm support	80661	✓	✓	✓	✓		✓	✓	✓
3	Screw M5x14 MF6S Zn8/P esloc	11237	✓	✓	✓	✓		✓	✓	✓
4	Guide one-piece footplate	83421	✓	✓	✓			✓	✓	✓
5	Locking nut M 5 domed zink plated	12168	✓	✓	✓	✓		✓	✓	✓
6	Screw M5x12 K6S 10.9 zink plated	11208	✓	✓	✓	✓		✓	✓	✓
7	Side protection footplate	83420	✓	✓	✓	✓		✓	✓	✓

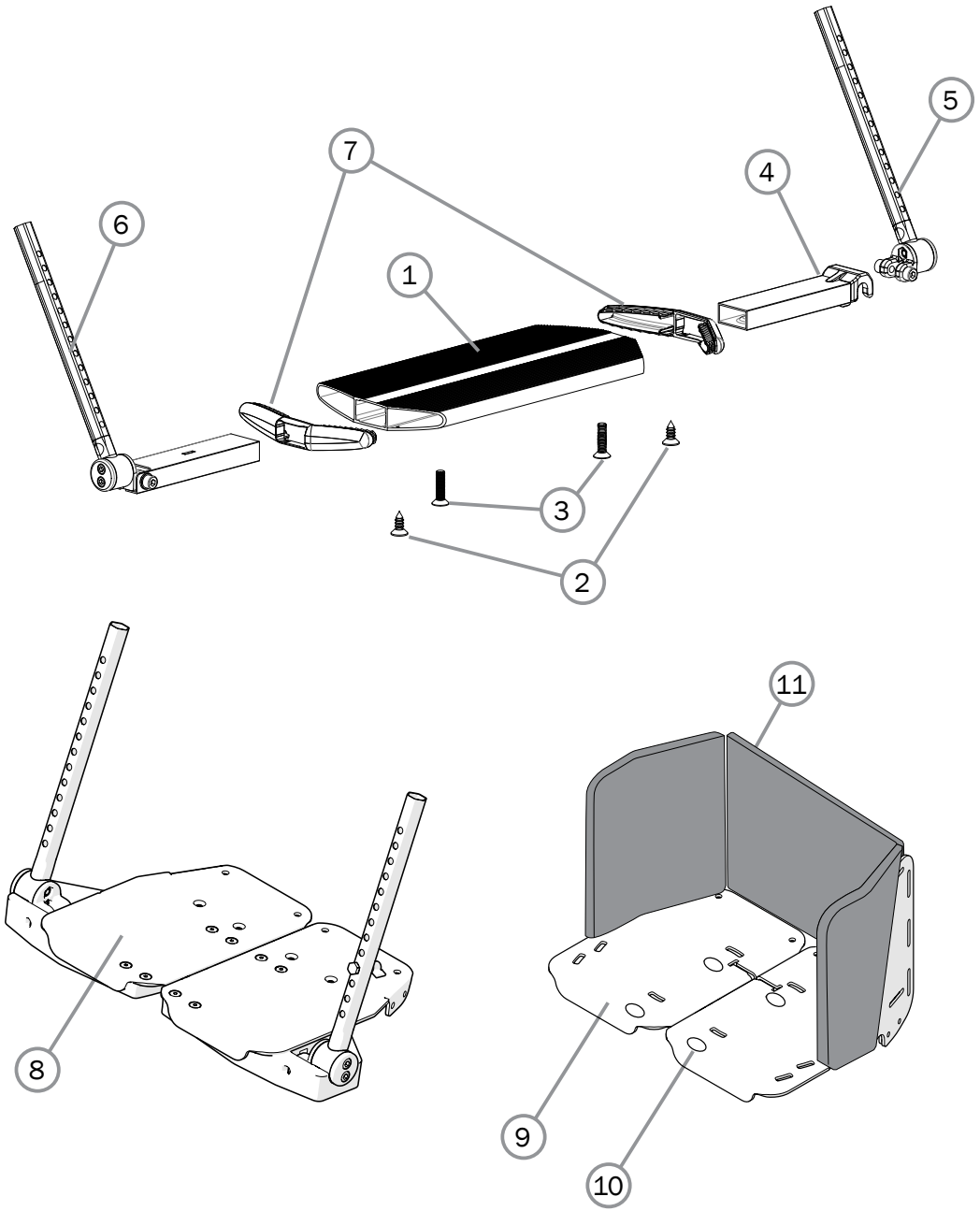

Pos.	Description	Item. No.	Cross 6	Cross 5	Cross 5 XL	Prio	Transit	Xact	Crissy Active	Crissy Sw-Aw.
1-7	Foot support one piece 35-37.5 cm compl	25936	✓	✓				✓	✓	✓
	Foot support one piece 40-50 cm compl	25937	✓	✓	✓			✓	✓	✓
	Foot support one piece 50-60 cm compl	26853	✓	✓	✓					
1	Foot support one piece 35-37.5 cm	81130	✓	✓	✓			✓	✓	✓
	Foot support one piece 40-50 cm	81131	✓	✓	✓			✓	✓	✓
	Foot support one piece 50-60 cm	81993	✓	✓	✓					
2	Screw B 6 3.5x9.5 FXS black	11384	✓	✓	✓			✓	✓	✓
3	Screw M5x20 MF6S black	11526	✓	✓	✓			✓	✓	✓
4	Locking joint for foot support compl 35-37.5 cm	25931	✓	✓				✓	✓	✓
	Locking joint for foot support comp 40-50 cm, 50-60 cm	25932	✓	✓	✓			✓	✓	✓
5	Attachment tube foot support le	25934	✓	✓	✓			✓	✓	✓
6	Attachment tube foot support ri	25935	✓	✓	✓			✓	✓	✓
7	End caps foot support one piece	50830	✓	✓	✓			✓	✓	✓
8	Foot support compl B40	28662				✓				
	Foot support compl B45	28663				✓				
	Foot support compl B50	28664				✓				
	Foot support compl B55	28665				✓				
9-11	Footbox W=40-45 cm	28642				✓				
	Footbox W=50-55 cm	28643				✓				
9	Footbox W=40-45 cm					✓				
	Footbox W=50-55 cm					✓				
10	Screw kit					✓				
11	Padding footbox W=40-45 cm	28778				✓				
	Padding footbox W=50-55 cm	28779				✓				

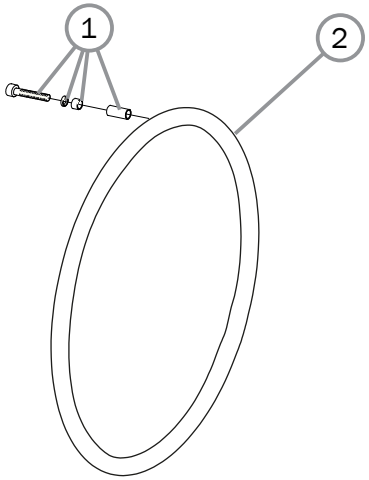

Pos.	Description	Item. No.	Cross 6	Cross 5	Cross 5 XL	Prio	Transit	Xact	Crissy Active	Crissy Sw-Aw.
1	Assembly kit handrim 4m plas. Plastic handrim	24514	✓	✓	✓	✓			✓	✓
	Assembly kit handrim 4m	28113	✓	✓	✓	✓			✓	✓
2	**20" Rear wheel**									
	Handrim D465 wheel 20" alu	81109	✓	✓	✓	✓				
	Handrim D465 wheel 20" vinyl	81229	✓	✓	✓	✓				
	Handrim D425 wheel 20" cellular, clip mounted	24442	✓	✓	✓	✓				
	Handrim D465 wheel 20" stainless	21034	✓	✓	✓	✓				
	22" Rear wheel									
	Handrim D500 wheel 22" alu	25636	✓	✓	✓	✓			✓	✓
	Handrim D500 wheel 22" stainless	24395	✓	✓	✓	✓			✓	✓
	Handrim D500 wheel 22" vinyl	80895	✓	✓	✓	✓			✓	✓
	Handrim D469 wheel 22” cellular, clip mounted	24551	✓	✓	✓	✓			✓	✓
2	**24" Rear wheel**									
	Handrim D540 wheel 24" alu	25181	✓	✓	✓	✓			✓	✓
	Handrim D540 wheel 24" stainless	24023	✓	✓	✓	✓			✓	✓
	Handrim D540 wheel 24" vinyl black matte	82998	✓	✓	✓	✓			✓	✓
	Handrim D540 wheel 24" cellular clip mounted	80800	✓	✓	✓	✓			✓	✓
	26" Rear wheel									
	Handrim D585 wheel 26" alu	81508	✓	✓	✓					
	Handrim D585 wheel 26" stainless	81510	✓	✓	✓					

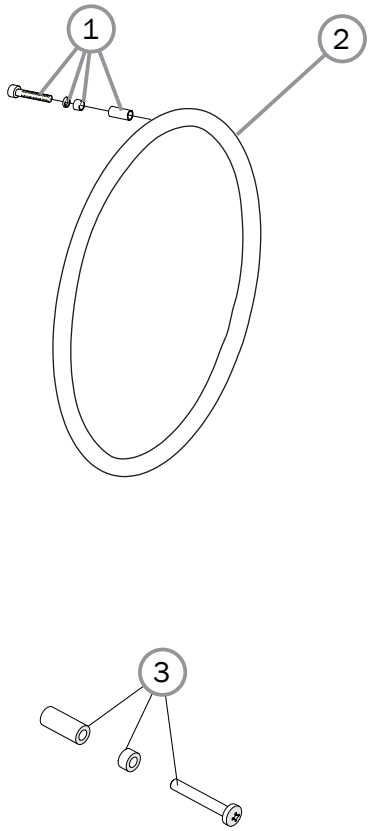

Pos.	Description	Art. No.	Cross 6	Cross 5	Cross 5 XL	Prio	Transit	Xact	Crissy Active	Crissy Sw-Aw.
1	Assembly kit handrim 6 ap (not plastic coated)	83892	✓	✓	✓	✓		✓	✓	✓
2	**20" Rear wheel**									
	Handrim 20" al 6 ap	83890	✓	✓	✓	✓		✓		
	Handrim 20” stainl 6 ap	83891	✓	✓	✓	✓		✓		
	Handrim 20” plastic coated 6 ap	83339	✓	✓	✓	✓		✓		
	22" Rear wheel									
	Handrim 22 al 6 ap	83888	✓	✓	✓	✓		✓	✓	✓
	Handrim 22 stainl 6 ap	83889	✓	✓	✓	✓		✓		
	Handrim 22 plastic coated 6 ap	83338	✓	✓	✓	✓		✓	✓	✓
	Handrim 22 hard al 6 rivet nut	83336B						✓	✓	✓
	Handrim 22 ti 6 rivet nut	83513						✓	✓	✓
2	**24" Rear wheel**									
	Handrim 24 al 6 ap	83886	✓	✓	✓	✓		✓	✓	✓
	Handrim 24 stainl 6 ap	83887	✓	✓	✓	✓		✓		
	Handrim 24 plastic coated 6 ap	83335	✓	✓	✓	✓		✓	✓	✓
	Handrim 24 hard al 6 rivet nut	83334B						✓	✓	✓
	Handrim 24 ti 6 rivet nut	83514						✓	✓	✓
	25" Rear wheel									
	Handrim 25 hard al 6 ap	83340B	✓	✓	✓			✓		
	Handrim 25 plastic coated 6 ap	83341	✓	✓	✓			✓		
	Handrim 25 ti 6 rivet nut	83518						✓		
3	Assembly kit handrim 6m plastic handrim C6 Maxx	24081	✓	✓	✓	✓		✓	✓	✓

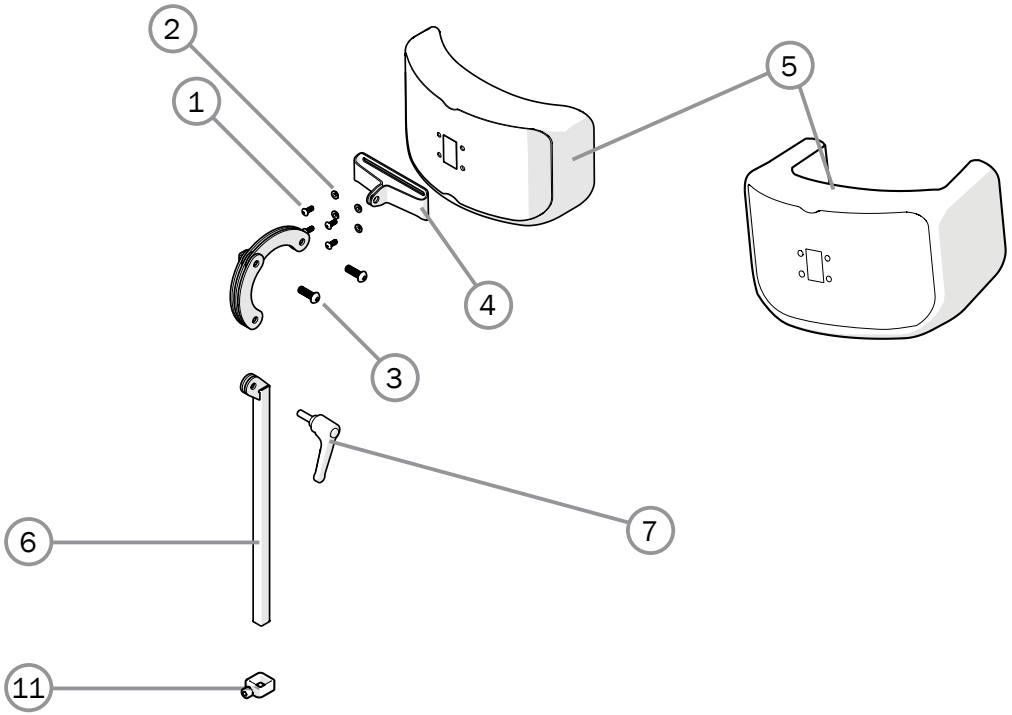

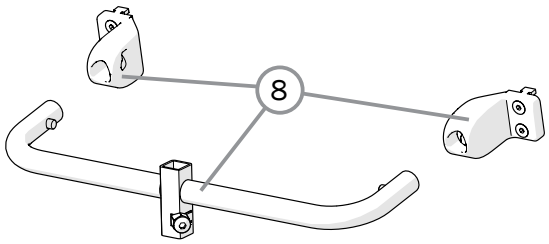

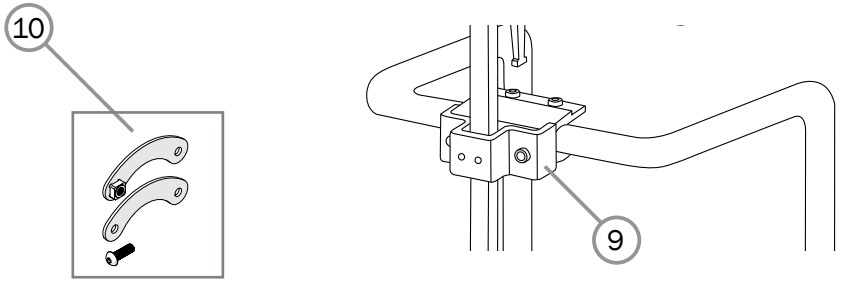

Pos.	Description	Item. No.	Cross 6	Cross 5	Cross 5 XL	Prio	Transit	Xact	Crissy Active	Crissy Sw-Aw.
1-7	Head support angle adj dark grey 26x14cm incl turtle bar 350mm	28534-60	✓	✓	✓	✓			✓	✓
	Head support angle adj hygiene 26x14cm incl turtle bar 350mm	28534-65	✓	✓	✓	✓			✓	✓
	Head support w side support plush incl turtle bar 350 mm	28536-60	✓	✓	✓	✓			✓	✓
	Head support with side support hygiene incl turtle bar 350 mm	28536-65	✓	✓	✓	✓			✓	✓
	Headrest angle adj hyg black turtle hygiene Black turtles 350 mm	28538-65	✓	✓	✓	✓			✓	✓
	Head support with side cushion hyg. grey incl turtle bar 350 mm black	28539-65	✓	✓	✓	✓			✓	✓
	Head support angle adj plush 3 26x14cm incl turtle bar incl 3 handle	28644-60	✓	✓	✓	✓			✓	✓
	Head support angle adj hyg. 3 26x14cm incl turtle bar incl 3 handle	28644-65	✓	✓	✓	✓			✓	✓
	Head support with side cushion hyg. incl turtle 350 mm incl 3 handle	28645-65	✓	✓	✓	✓			✓	✓
1	Screw M5x 12 K6S 10.9 fzb	11208	✓	✓	✓	✓			✓	✓
2	Joint bushing	50285	✓	✓	✓	✓			✓	✓
3	Screw M8x25	11706	✓	✓	✓	✓			✓	✓
4	Attachment head support	83288	✓	✓	✓	✓			✓	✓
5	Cover for head support plush	63177-60	✓	✓	✓	✓			✓	✓
	Cover for head support hygiene	63177-65	✓	✓	✓	✓			✓	✓
	Cover for head support with side support	63185-65	✓	✓	✓	✓			✓	✓
6	Tube head support Turtle 350mm	28533	✓	✓	✓	✓			✓	✓
	Tube head support Turtle 150mm	28532				✓				
7	Handle head support	80684	✓	✓	✓	✓			✓	✓
8	Head support attachment 3A 35 cm	28125	✓	✓						
	Head support attachment 3A 37,5 cm	28126	✓	✓						
	Head support attachment 3A 40 cm	28127	✓	✓						
	Head support attachment 3A 42,5 cm	28128	✓	✓						
	Head support attachment 3A 45 cm	28129	✓	✓						
	Head support attachment 3A 47,5 cm	28130	✓	✓	✓					
	Head support attachment 3A 50 cm	28131	✓	✓	✓					
	Head support attachment 3A 52,5 cm	28132	✓	✓	✓					
	Head support attachment 3A 52,5 cm	28133	✓	✓	✓					
	Head support attachment 3A 52,5 cm	28134	✓	✓	✓					
	Head support attachment 3A 52,5 cm	28135	✓	✓	✓					
9	Head support bracket	25795	✓	✓	✓				✓	✓
10	Extension head support	29012	✓	✓	✓	✓				
11	Memory function head support	28564				✓				

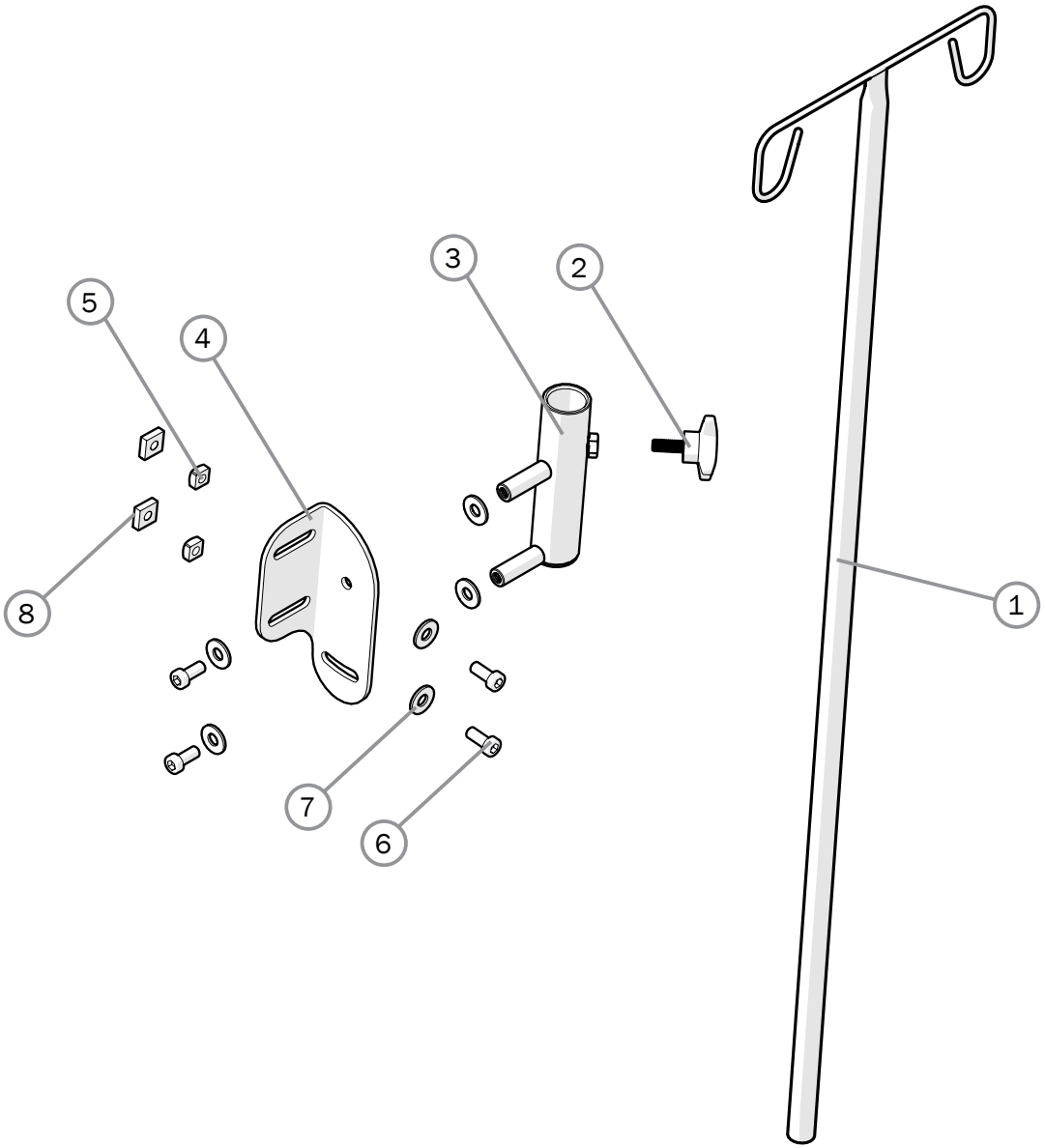

Pos.	Description	Item. No.	Cross 6	Cross 5	Cross 5 XL	Prio	Transit	Xact	Crissy Active	Crissy Sw-Aw.
1	IV stand	28338	✓	✓	✓					
	IV stand	28341				✓				
2	Knob		✓	✓	✓	✓				
3	Attachment		✓	✓	✓	✓				
4	Plate		✓	✓	✓					
5	Nut		✓	✓	✓					
6	Screw		✓	✓	✓	✓				
7	Washer		✓	✓	✓					
8	Nut		✓	✓	✓					
9	Bracket					✓				
1-8	IV stand compl	28323	✓	✓	✓					
2-8	Attachment IV stand	28339	✓	✓	✓					
1-3, 6, 9	Drip stand cpl	28405				✓				

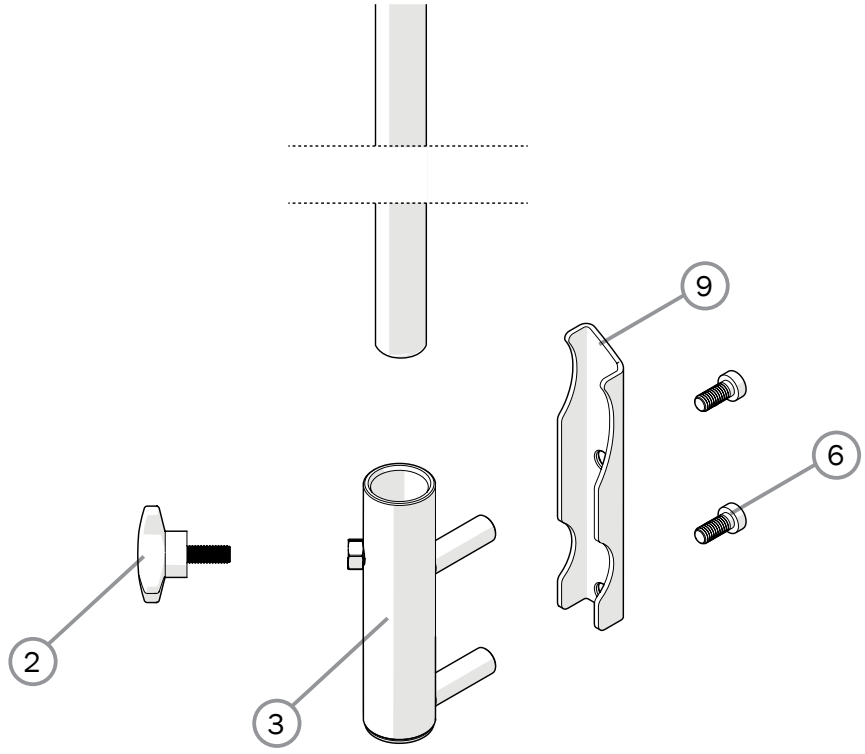

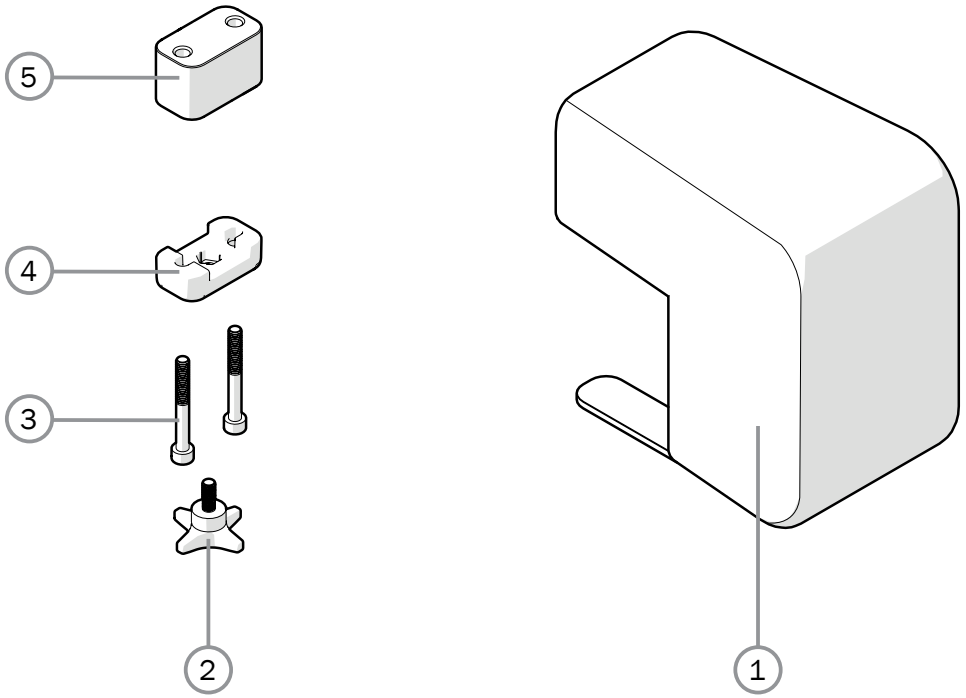

Pos.	Description	Item. No.	Cross 6	Cross 5	Cross 5 XL	Prio	Transit	Xact	Crissy Active	Crissy Sw-Aw.
1	Leg abduction	28194				✓				
2	Knob 40 M6x17	80297				✓				
3	Screw	11037				✓				
4	Bracket	28305-01				✓				
5	Spacer	83042				✓				
1-5	Leg abduction compl	28022				✓				

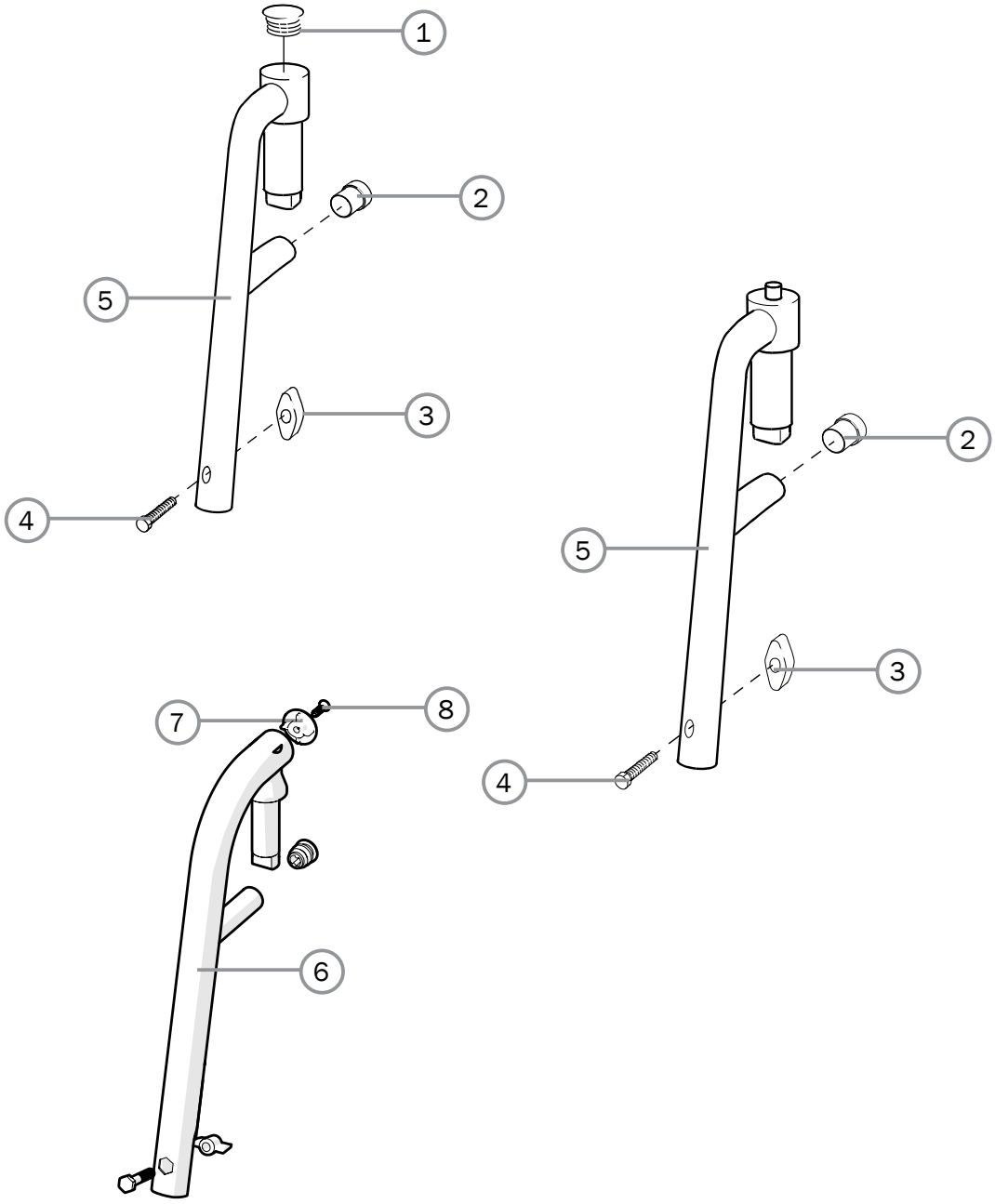

Pos.	Description	Item. No.	Cross 6	Cross 5	Cross 5 XL	Prio	Transit	Xact	Crissy Active	Crissy Sw-Aw.
1	Dust cover leg support	50287	✓	✓	✓	✓	✓	✓		✓
2	Dust cover 16x 1 black	50240	✓	✓	✓	✓	✓	✓		✓
3	Wing nut M6	80847	✓	✓	✓	✓	✓	✓		✓
4	Screw M6x30 M6S 8.8 zink plated DIN 931	11555	✓	✓	✓	✓	✓	✓	✓	✓
1-5	Leg support narrow angle	25570-01	✓	✓	✓	✓		✓		✓
	Leg support wide angle	25574-01	✓	✓	✓	✓	✓	✓		✓
	Leg support narrow short	25571-01	✓	✓	✓	✓		✓		✓
2-5	Leg support narrow short lockable	25572-01	✓	✓	✓			✓		✓
	Leg support narrow lockable	25573-01	✓	✓	✓			✓		✓
	Leg support wide lockable	25575-01	✓	✓	✓		✓	✓		✓
6	Leg support active		✓	✓				✓		✓
7	End cap leg support active	51286	✓	✓				✓		✓
8	Screw B 8x16 FXS	11401	✓	✓				✓		✓
2-4, 6-8	Leg support active	28888	✓	✓				✓		✓

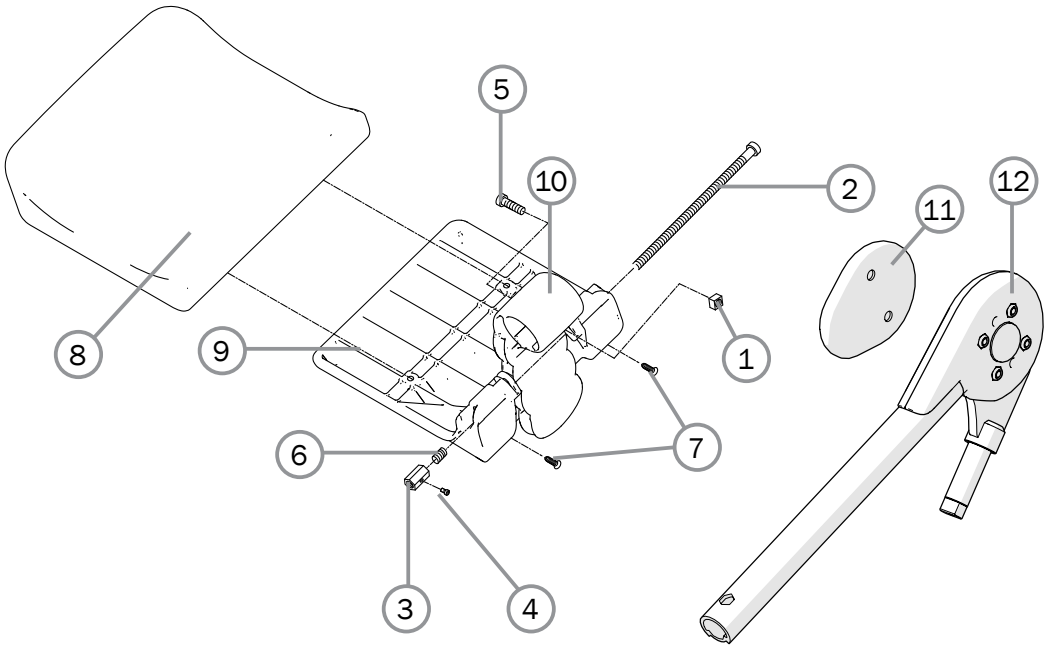

Pos.	Description	Item. No.	Cross 6	Cross 5	Cross 5 XL	Prio	Transit	Xact	Crissy Active	Crissy Sw-Aw.
1	Nut attachment calf support	20517	✓	✓	✓	✓				
2	Screw MC6S M6x120 10.9		✓	✓	✓	✓				
3	Nut M6 calf support		✓	✓	✓	✓				
4	Screw M4x10 MC6S 8.8		✓	✓	✓	✓				
5	Screw M6x20 MC6S 8.8		✓	✓	✓	✓				
6	Spring		✓	✓	✓	✓				
7	Screw B 8x19 RXS/A2 ph st 4.2	11064	✓	✓	✓	✓				
8	(Pad calf support Prio 40 grey hygiene)		✓	✓	✓	✓				
9	(Calf support)		✓	✓	✓	✓				
10	(Attachment calf support)		✓	✓	✓	✓				
1-10	Calf support cpl 40 cm grey hygiene	27733-65	✓	✓		✓				
	Calf support cpl 45 cm grey hygiene	27734-65	✓	✓		✓				
	Calf support cpl 50 cm grey hygiene	27735-65	✓	✓	✓	✓				
	Calf support cpl 55 cm grey hygiene	27736-65	✓	✓	✓	✓				
11	Knee pad pur compl	82666	✓	✓	✓	✓				
12	Leg support elevating right	27730-01-1	✓	✓	✓	✓				
	Leg support elevating left	27730-01-2	✓	✓	✓	✓				
1-12	Leg support elevating Prio 40 cm grey hygiene complete ri	27857-65-1	✓	✓		✓				
	Leg support elevating Prio 40 cm grey hygiene complete le	27857-65-2	✓	✓		✓				
	Leg support elevating Prio 45 cm grey hygiene complete ri	27858-65-1	✓	✓		✓				
	Leg support elevating Prio 45 cm grey hygiene complete le	27858-65-2	✓	✓		✓				
	Leg support elevating Prio 50 cm grey hygiene complete ri	27859-65-1	✓	✓	✓	✓				
	Leg support elevating Prio 50 cm grey hygiene complete le	27859-65-2	✓	✓	✓	✓				
	Leg support elevating Prio 55 cm grey hygiene complete ri	27860-65-1	✓	✓	✓	✓				
	Leg support elevating Prio 55 cm grey hygiene complete le	27860-65-2	✓	✓	✓	✓				

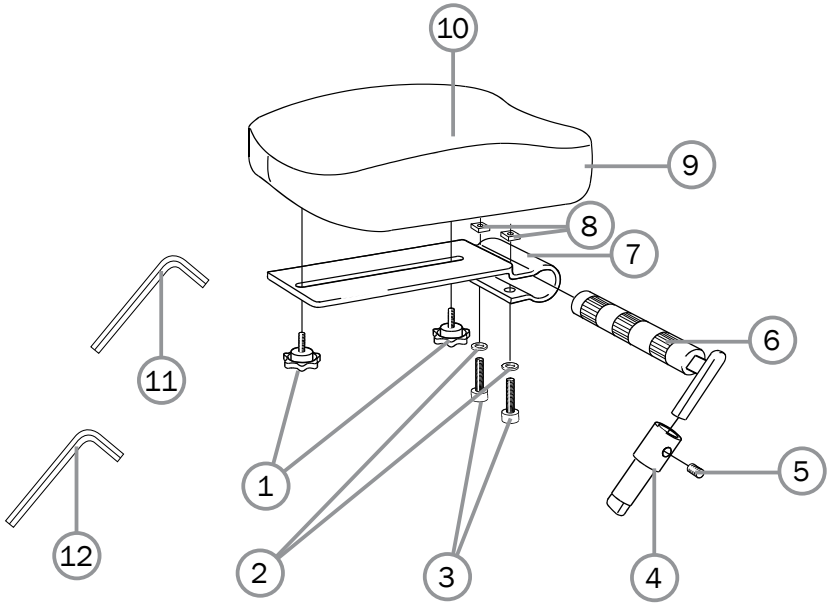

Pos.	Description	Item. No.	Cross 6	Cross 5	Cross 5 XL	Prio	Transit	Xact	Crissy Active	Crissy Sw-Aw.
1	Knob M5x15 leg support amputee	80807	✓	✓	✓	✓				✓
2	Washer BRB 8.4/A2 stainless	13011	✓	✓	✓	✓				✓
3	Screw M8x35 MC6S	11276	✓	✓	✓	✓				✓
4	Locking tube for leg support amputee	25518-01	✓	✓	✓	✓				✓
5	Stop screw M8x8 black	11388	✓	✓	✓	✓				✓
6	Axle leg support amputee compl	25519-01	✓	✓	✓	✓				✓
7	Attachment calf support leg support amputee	80809	✓	✓	✓	✓				✓
8	Square nut high M8	12056	✓	✓	✓	✓				✓
9	Support pad leg support amputee dark grey	62335-60	✓	✓	✓	✓				✓
	Support pad leg support Dartex	62335-63	✓	✓	✓	✓				✓
	Support pad leg support amputee ri XL dark grey	62452-60-1			✓	✓				✓
	Support pad leg support amputee le XL dark grey	62452-60-2			✓	✓				✓
	Support pad leg support amputee ri XL dartex	62452-63-1			✓	✓				✓
	Support pad leg support amputee le XL dartex	62452-63-2			✓	✓				✓
10	Cover leg support amputee Cross dark grey	62893-60	✓	✓						✓
	Cover leg support amputee Cross Dartex	62893-63	✓	✓						✓
	Cover leg support amputee XL ri dark grey	62450-60			✓	✓				
	Cover leg support amputee XL le dark grey	62761-60			✓	✓				
	Cover leg support amputee XL ri Dartex	62450-63			✓	✓				
	Cover leg support amputee XL le Dartex	62761-63			✓	✓				
11	Allen key 4 DIN 911	80141	✓		✓	✓				✓
12	Allen key 6 180 mm	82625	✓		✓	✓				✓
1-12	Amputee support compl Dark grey	25516-60	✓		✓	✓		✓		✓
	Amputee support Cross compl Dartex	25516-63	✓		✓	✓				✓
	Amputee support XL ri compl dark grey	26210-60-1			✓	✓				✓
	Amputee support XL le compl dark grey	26210-60-2			✓	✓				✓
	Amputee support XL right compl Dartex	26210-63-1			✓	✓				✓
	Amputee support XL left compl Dartex	26210-6-2			✓	✓				✓

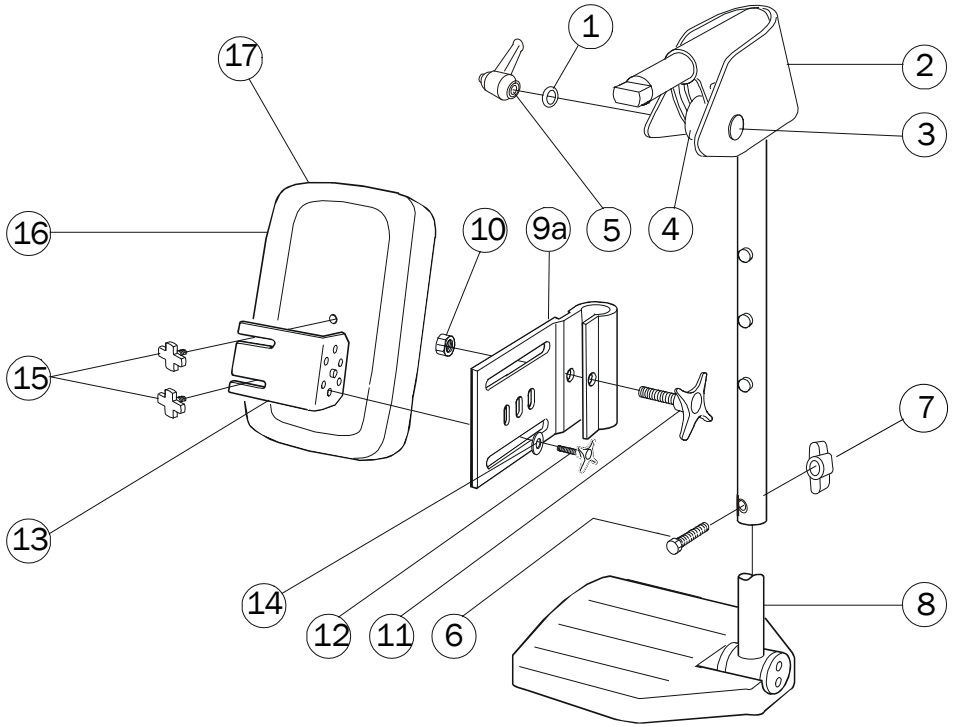

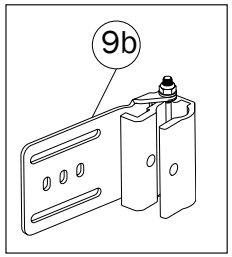

Pos.	Description	Item. No.	Cross 6	Cross 5	Cross 5 XL	Prio	Transit	Xact	Crissy Active	Crissy Sw-Aw.
1	Washer NB 6x16x1.0 black crome	13034	✓	✓	✓				✓	✓
2	Joint guard leg support angle adjustable	62176	✓	✓	✓				✓	✓
3	Screw M 6x 40 MVBF zink plated	11234	✓	✓	✓				✓	✓
4	Spacer leg support vrb Cross	20414	✓	✓	✓				✓	✓
5	Handle M 6x25 43 mm black	80488	✓	✓	✓				✓	✓
6	Screw M 6x 30 M6S zink plated	11555	✓	✓	✓				✓	✓
7	Wing nut M 6	80847	✓	✓	✓				✓	✓
1-7	Leg support elevating mod 1 Cross black	25660-01	✓	✓	✓				✓	✓
8	See page 17 (foot supports)									
9a	Attachment leg support elevating Cross	24446-01	✓	✓	✓				✓	✓
10	Nut M6M M 8 zink plated	12006	✓	✓	✓				✓	✓
11	Knob 60x22 M 8x32 black	80295	✓	✓	✓				✓	✓
12	Knob 40 M 6x17 black	80297	✓	✓	✓				✓	✓
13	Holder for calf support leg support elevating black	24421-01	✓	✓	✓				✓	✓
14	Washer 6.4x17x3 DIN 7349 steel zink plated	13052	✓	✓	✓				✓	✓
9a-14	Attachment leg support elevating with holder black	24544-01	✓	✓	✓				✓	✓
9b-14	Attachment leg support FlipUp elevating with holder black	27322-01	✓	✓	✓				✓	✓
15	Knob M 5x15 leg support	80807	✓	✓	✓				✓	✓
15-16	Calf support 35-37.5 cm dark grey	62105-60	✓	✓					✓	✓
	Calf support 40-42.5 cm dark grey	62104-60	✓	✓					✓	✓
	Calf support 45-47.5 cm dark grey	62484-60	✓	✓	✓				✓	✓
	Calf support 50-60 cm dark grey	62451-60	✓	✓	✓				✓	✓
17	Cover calf support 35-37.5	62888-60	✓	✓					✓	✓
	Cover calf support 40-42.5	62889-60	✓	✓					✓	✓
	Cover calf support 45-47.5	62890-60	✓	✓	✓				✓	✓
	Cover calf support 50-60	62906-60	✓	✓	✓				✓	✓

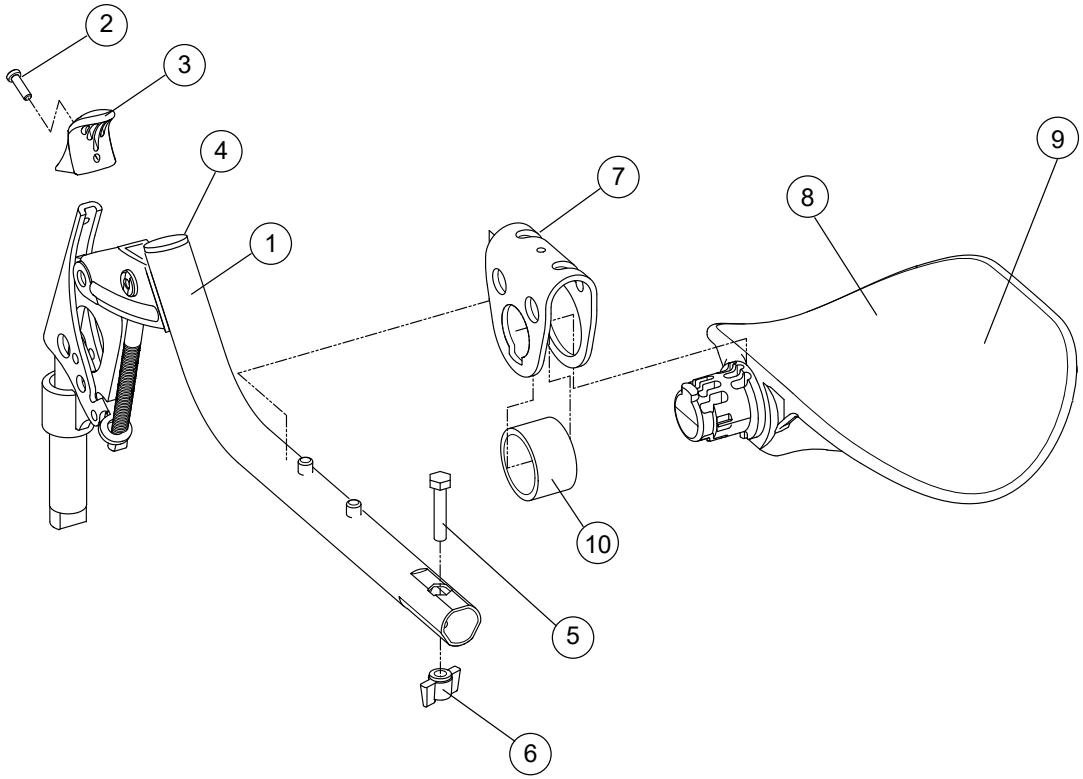

Pos.	Description	Item. No.	Cross 6	Cross 5	Cross 5 XL	Prio	Transit	Xact	Crissy Active	Crissy Sw-Aw.
1-8, 10	Leg support elevating compl with calf support	26100	✓	✓	✓					✓
2	Screw K40x10 PT-KX black	11419	✓	✓	✓					✓
3	Handle adj leg support	50842	✓	✓	✓					✓
4	Dust cover 22x2	51020	✓	✓	✓					✓
5	Screw M6x30 M6S zink plated	11555	✓	✓	✓					✓
6	Wing nut WN M6	80847	✓	✓	✓					✓
7	Bracket calf support adj leg support	26122	✓	✓	✓					✓
8	Calf support adj leg support	50844	✓	✓	✓					✓
9	Cover calf support elevating leg support dark grey	62762-60	✓	✓	✓					✓
	Cover calf support elevating leg support Dartex	62762-63	✓	✓	✓					✓
10	PUR ring	50860	✓	✓	✓					✓
7-8, 10	Calf support compl adj leg support	26136	✓	✓	✓					✓
1-6	Leg support elevation without calfsupport	27149	✓	✓	✓					✓

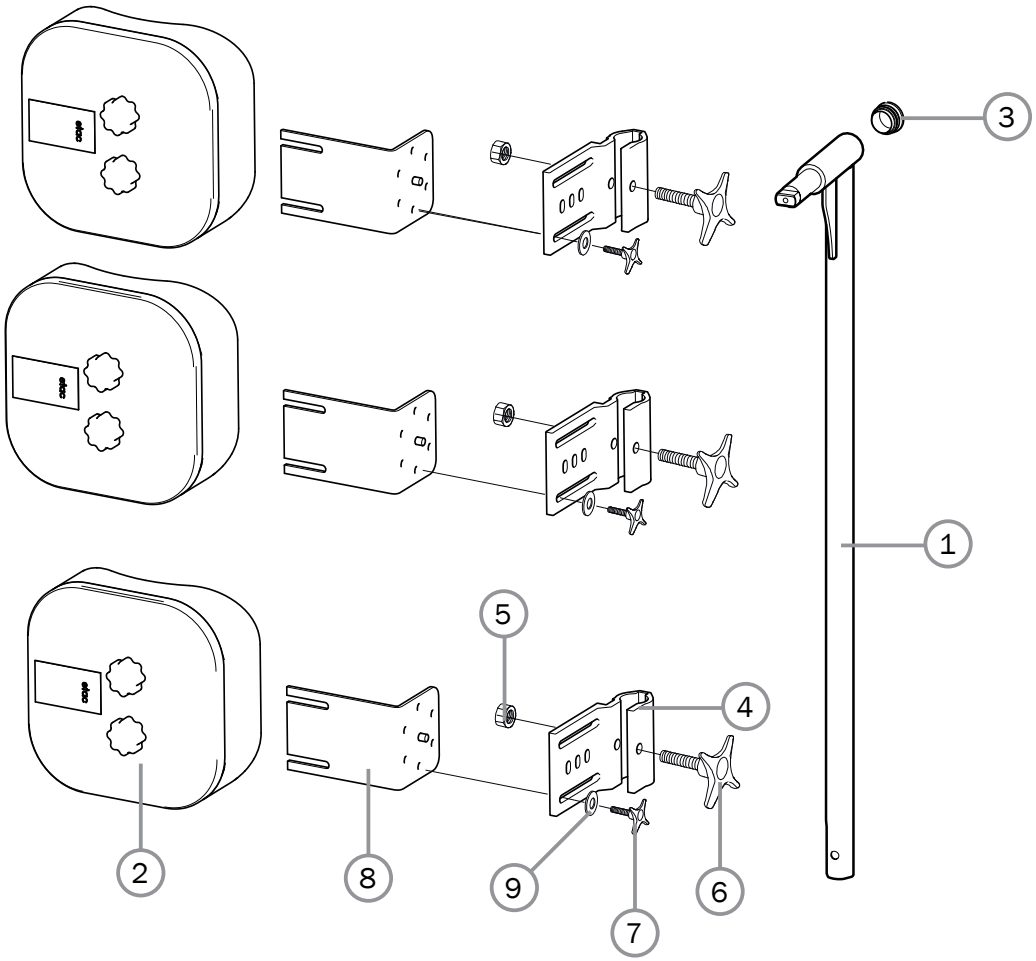

Pos.	Description	Item. No.	Cross 6	Cross 5	Cross 5 XL	Prio	Transit	Xact	Crissy Active	Crissy Sw-Aw.
1-9	Plaster leg support right	27417-1	✓	✓	✓					
	Plaster leg support left	27417-2	✓	✓	✓					
1	Plaster leg support		✓	✓	✓					
2	Cushion Plaster leg support	82520	✓	✓	✓					
3	End stop	50287	✓	✓	✓					
4	Attachment leg support	24446-01	✓	✓	✓					
5	Nut M8	12006	✓	✓	✓					
6	Knob 60x22 M8x32 black	80295	✓	✓	✓					
7	Knob 40 M6x17 black	80297	✓	✓	✓					
8	Holder for calf support	24421-01	✓	✓	✓					
9	Washer 6.4x17x3 DIN 7349	13052	✓	✓	✓					
4-9	Attachment leg support	24544-01	✓	✓	✓					

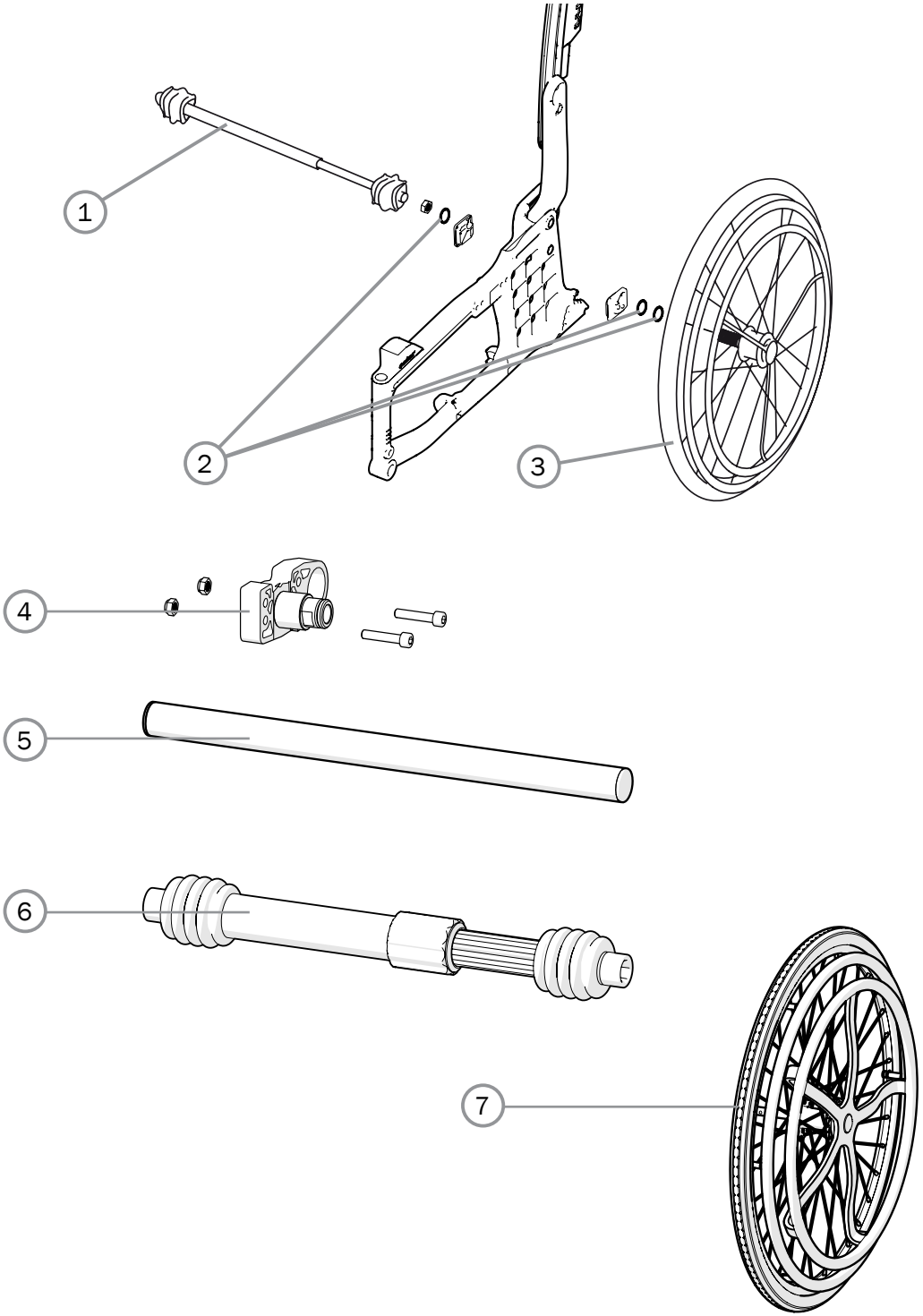

Pos.	Description	Item. No.	Cross 6	Cross 5	Cross 5 XL	Prio	Transit	Xact	Crissy Active	Crissy Sw-Aw.
1	Telescoping shaft single hand drive Cross 35-37.5 cm cpl	27317	✓	✓	✓					
	Telescoping shaft single hand drive compl Cross 40-42.5 cm/Next 35-37.5 cm	27318	✓	✓	✓					
	Telescoping shaft single hand drive compl Cross 45-50 cm/Next 40-45 cm	27319	✓	✓	✓					
	Telescoping shaft single hand drive compl Cross 52.5-57.5 cm/Next 47.5-55 cm	27320	✓	✓	✓					
2-3	Single-hand drive 20”Cross/Cross XL compl	26534	✓	✓	✓					
	Single-hand drive 22”Cross/Cross XL compl	26533	✓	✓	✓					
	Single-hand drive 24”Cross/Cross XL compl	26522	✓	✓	✓					
4	Assembly kit one arm drive std	24071						✓		
5	Cross bar one arm drive B35	24072						✓		
	Cross bar one arm drive B37,5	24073						✓		
	Cross bar one arm drive B40	24074						✓		
	Cross bar one arm drive B42,5	24075						✓		
	Cross bar one arm drive B45	24076						✓		
	Cross bar one arm drive B47,5	24077						✓		
	Cross bar one arm drive B50	24078						✓		
6	Telescopic shaft one arm drive 1	24171						✓		
	Telescopic shaft one arm drive 2	24172						✓		
	Telescopic shaft one arm drive 3	24173						✓		
	Telescopic shaft one arm drive 4	24174						✓		
	Telescopic shaft one arm drive 5	24175						✓		
7	Drive unit one arm drive 20	84101						✓		
	Drive unit one arm drive 22	84102						✓		
	Drive unit one arm drive 24	84103						✓		

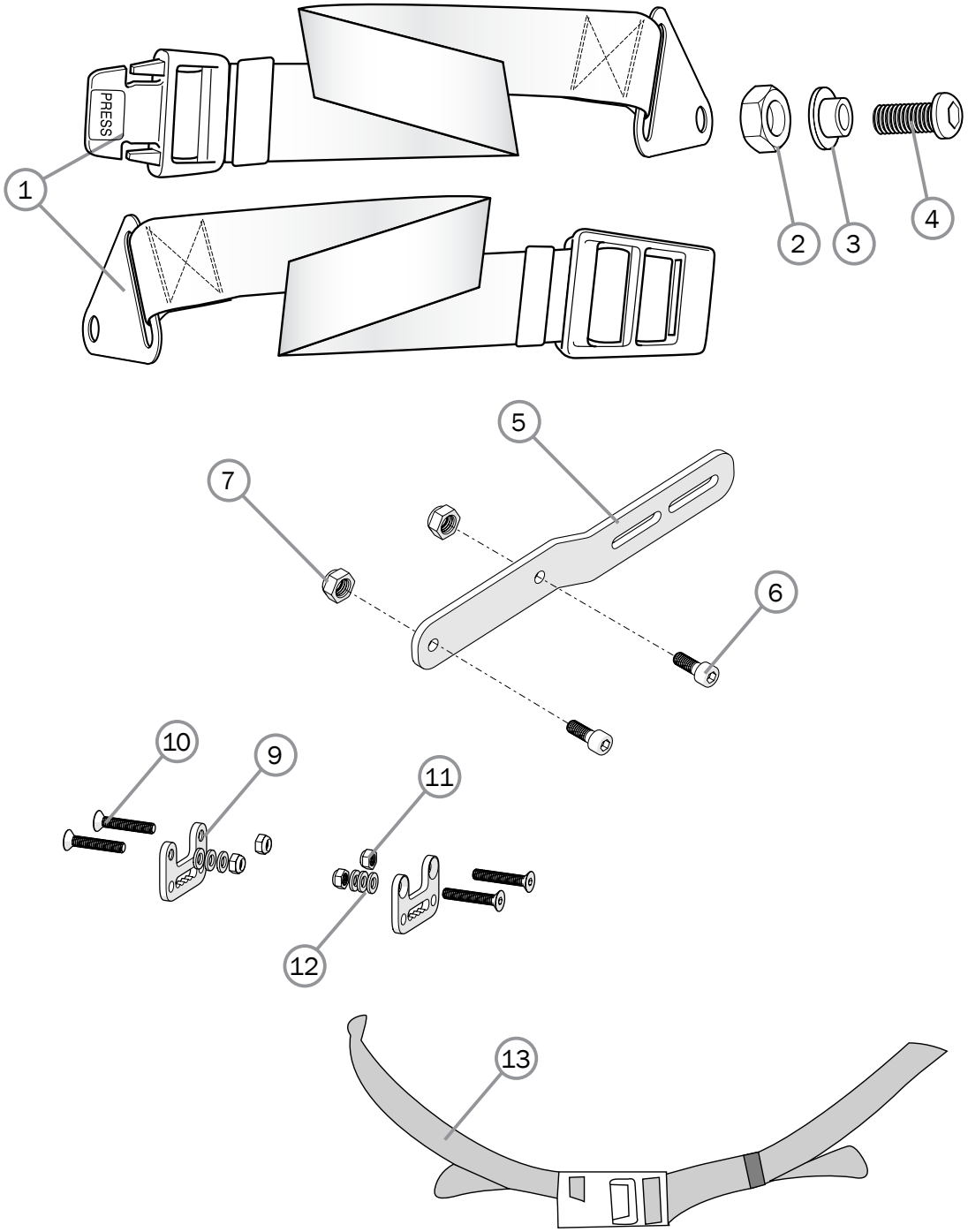

Pos.	Description	Item. No.	Cross 6	Cross 5	Cross 5 XL	Prio	Transit	Xact	Crissy Active	Crissy Sw-Aw.
1	Positioning belt length 100 mm	27904	✓			✓	✓	✓	✓	✓
	Positioning belt length 128 mm	28544	✓			✓	✓	✓	✓	✓
2	Locking nut M6									
3	Spacer positioning belt									
4	Screw M 6x 14 K6S									
5-7	Attachment positioning belt	28641				✓				
6	Screw M6x16 MC6S 12.9	11253				✓				
7	Locking nut M6	12035				✓				
8	Positioning belt compl	25668		✓	✓		✓			
	Positioning belt Cross XL	26163		✓	✓					
9-11	Attachment positioning belt	28933						✓		
9	Attachment positioning belt							✓		
10	Screw M6x35 MF6S 10.9							✓		
11	Locking nut M6							✓		
12	Washer 6.4x12x1.6 Zn8/P4							✓		
13	Safety belt with springlock	62190		✓						

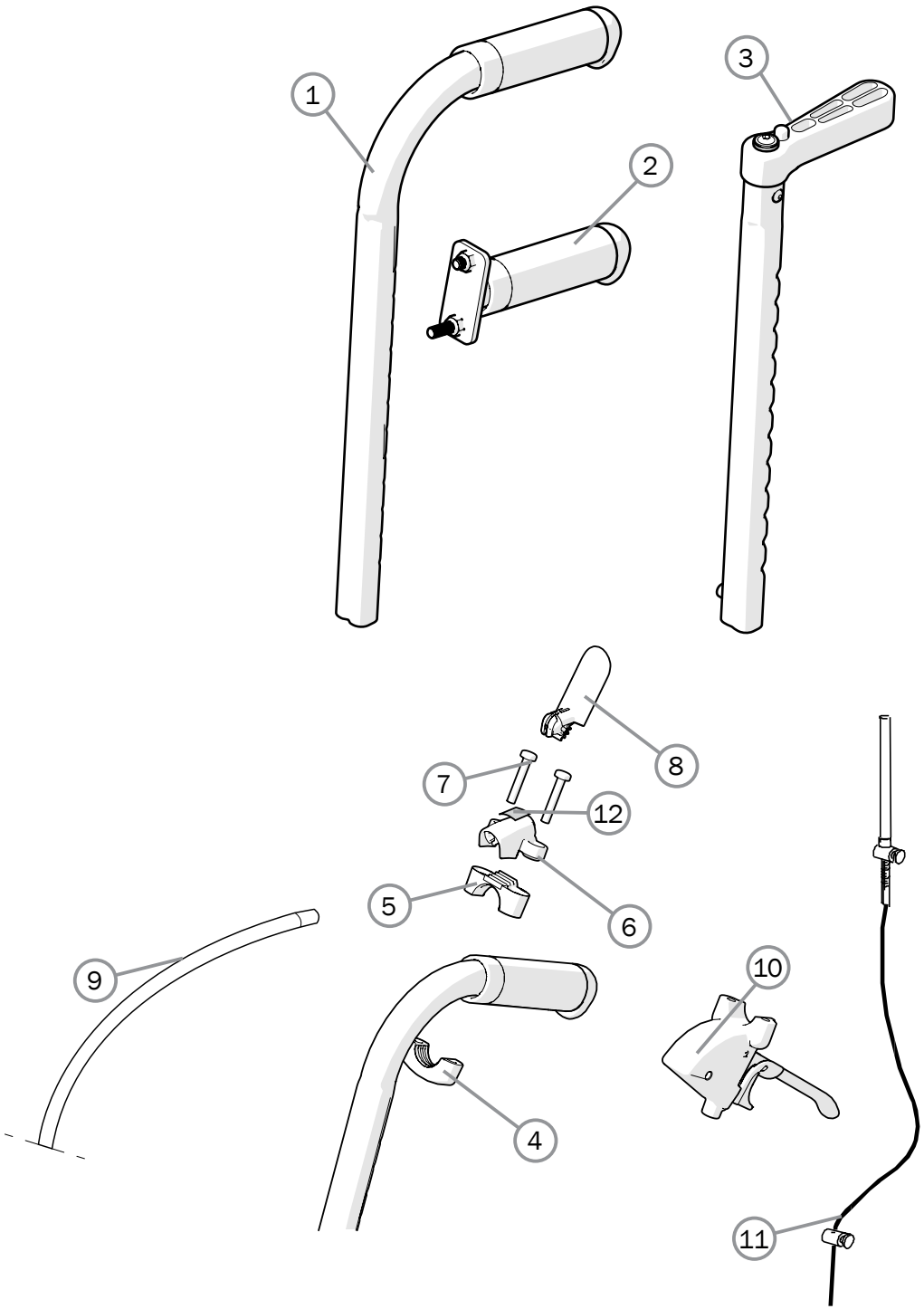

Pos.	Description	Item. No.	Cross 6	Cross 5	Cross 5 XL	Prio	Transit	Xact	Crissy Active	Crissy Sw-Aw.
1	Push handles h adj Cross	27588-01	✓	✓	✓					
	Push handles h adj Cross XL	27589-01			✓					
2	Push handle fixed Crossback 3A	27644	✓	✓	✓					
3	Push handle swing-away	24591	✓							
1, 5-10	Push handle seat angle adj	28220-01				✓				
	Push handle back tilt controls	28219-01				✓				
1, 5-12	Push handle seat tilt brake controls	28222-01				✓				
	Push handle back tilt brake controls	28221-01				✓				
5	Attachment drum brake Prio	51050				✓				
6	Lower attachment wire control	51034				✓				
7	Upper attachment wire control	51032				✓				
8	Screw DG50 x 30 WN	11655				✓				
9	Control Prio	51033				✓				
10	Wire back support angle	83303				✓				
	Wire seat tilt	83302				✓				
11	Brake handle Prio compl (see section ”Drum brake”)					✓				
12	Wire kit drum brake (see section ”Drum brake”)					✓				
13	Label tilt controls	71373				✓				
	Label back support angle controls	71374				✓				

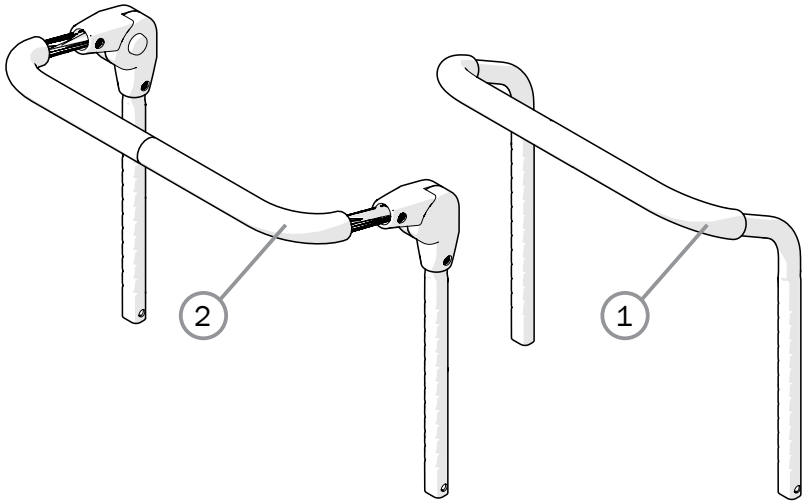

Pos.	Description	Item. No.	Cross 6	Cross 5	Cross 5 XL	Prio	Transit	Xact	Crissy Active	Crissy Sw-Aw.
1	Bow handle 32.5 cm. Back 3A 35 cm, height adj compl	27433-01	✓	✓				✓		
	Bow handle Cross back 2 35 cm. Back 3A 37.5 cm height adj compl*	25578-01	✓	✓						
	Bow handle Cross back 2 37.5 cm. Back 3A 40 cm height adj compl*	25579-01	✓	✓					✓	✓
	Bow handle Cross back 2 40 cm. Back 3A 42.5 cm height adj compl*	25580-01	✓	✓		✓			✓	✓
	Bow handle Cross back 2 42.5 cm. Back 3A 45 cm height adj compl*	25581-01	✓	✓					✓	✓
	Bow handle Cross back 2 45 cm. Back 3A 47.5 cm height adj compl*	25582-01	✓	✓		✓			✓	✓
	Bow handle Cross back 2 47.5 cm. Back 3A 50 cm height adj compl*	25730-01	✓	✓					✓	✓
	Bow handle Cross back 2 50 cm	25583-01							✓	✓
	Bow handle Cross XL 45 cm. Back 3A 47.5 cm height adj compl*	27434-01	✓		✓					
	Bow handle Cross XL 47.5 cm. Back 3A 50 cm height adj compl*	26063-01	✓		✓					
	Bow handle Cross XL 50 cm. Back 3A 52.5 cm height adj compl*	26064-01	✓		✓	✓				
	Bow handle Cross XL 52.5 cm. Back 3A 55 cm height adj compl*	26068-01	✓		✓					
	Bow handle Cross XL 55 cm. Back 3A 57.5 cm height adj compl*	26069-01			✓	✓				
	Bow handle Cross XL 57.5 cm. Back 3A 60 cm height adj compl*	26070-01			✓					
2	Bow handle angle adj 35 cm. Back 3A 37.5 cm*	27161	✓	✓				✓		
	Bow handle angle adj 37.5 cm. Back 3A 40 cm*	27162	✓	✓				✓		
	Bow handle angle adj 40 cm. Back 3A 42.5 cm*	27163	✓	✓		✓		✓		
	Bow handle angle adj 42.5 cm. Back 3A 45 cm*	27164	✓	✓				✓		
	Bow handle angle adj 45 cm. Back 3A 47.5 cm*	27165	✓	✓		✓		✓		
	Bow handle angle adj 47.5 cm. Back 3A 50 cm*	27166	✓	✓				✓		
	Bow handle angle adj 50 cm	27167	✓	✓		✓		✓		

*The larger width dimension applies to Cross 6, Cross 5 and Cross 5XL with back support 3A

Pos.	Description	Item. No.	Cross 6	Cross 5	Cross 5 XL	Prio	Transit	Xact	Crissy Active	Crissy Sw-Aw.
	20" Rear wheel									
1	Rear wheel 20 C6 high pressure al Speedlite excl axle	83908	✓	✓	✓	✓		✓		
	Rear wheel 20 C6 high pressure stainl Speedlite excl axle	83909	✓	✓	✓	✓		✓		
	Rear wheel 20 C6 high pressure plastic coated Speedlite excl axle	83884	✓	✓	✓	✓		✓		
	Rear wheel 20 C6 solid al excl axle	83885	✓	✓	✓	✓		✓		
	Rear wheel 20 C6 solid stainl excl axle	83910	✓	✓	✓	✓		✓		
	Rear wheel 20 C6 solid plastic coated excl axle	83911	✓	✓	✓	✓		✓		
	22" Rear wheel									
1	Rear wheel 22 C6 hp al Speedlite excl axle	83880	✓	✓	✓	✓		✓	✓	✓
	Rear wheel 22 C6 hp ss Speedlite excl axle	83906	✓	✓	✓	✓		✓	✓	✓
	Rear wheel 22 C6 hp plastic Speedlite excl axle	83881	✓	✓	✓	✓		✓	✓	✓
	Rear wheel 22 C6 solid al excl axle	83882	✓	✓	✓	✓		✓	✓	✓
	Rear wheel 22 C6 solid ss excl axle	83907	✓	✓	✓	✓		✓	✓	✓
	Rear wheel 22 C6 solid plastic excl axle	83883	✓	✓	✓	✓		✓	✓	✓
	Rear wheel 22 Maxx hp hard al Speedlite excl axle	28956	✓			✓		✓	✓	✓
	Rear wheel 22 Maxx hp plastic Speedlite excl axle	28957	✓			✓		✓	✓	✓
	Rear wheel 22 Maxx hp ti Speedlite excl axle	24087	✓			✓		✓	✓	✓
	Rear wheel 22 Maxx hp hard al Trailblazer R excl axle	24052-1	✓			✓		✓	✓	✓
	Rear wheel 22 Maxx hp hard al Trailblazer L excl axle	24052-2	✓			✓		✓	✓	✓
	Rear wheel 22 Maxx hp plastic Trailblazer R excl axle	24053-1	✓			✓		✓	✓	✓
	Rear wheel 22 Maxx hp plastic Trailblazer L excl axle	24053-2	✓			✓		✓	✓	✓
	Rear wheel 22 Maxx hp ti Trailblazer R exc axle	24115-1	✓			✓		✓		
	Rear wheel 22 Maxx hp ti Trailblazer L exc axle	24115-2	✓			✓		✓		
	Rear wheel 22 Maxx solid excl handrim and axle	84020	✓	✓	✓	✓		✓	✓	✓
	Rear wheel 22 Maxx solid hard al excl axle	24123	✓	✓	✓	✓		✓	✓	✓
	Rear wheel 22 Maxx solid ti excl axle	24124	✓	✓	✓	✓		✓	✓	✓
	Rear wheel 22 Maxx solid plastic excl axle	24125	✓	✓	✓	✓		✓	✓	✓
	24" Rear wheel									
1	Rear wheel 24 C6 hp al Speedlite excl axle	83873	✓	✓	✓	✓		✓	✓	✓
	Rear wheel 24 C6 hp ss Speedlite excl axle	83874	✓	✓	✓	✓		✓	✓	✓
	Rear wheel 24 C6 hp plastic Speedlite excl axle	83875	✓	✓	✓	✓		✓	✓	✓
	Rear wheel 24 C6 solid al excl axle	83876	✓	✓	✓	✓		✓	✓	✓
	Rear wheel 24 C6 solid ss excl axle	83877	✓	✓	✓	✓		✓	✓	✓
	Rear wheel 24 C6 solid plastic excl axle	83878	✓	✓	✓	✓		✓	✓	✓
	Rear wheel 24 Maxx hp hard al Speedlite excl axle	28950	✓	✓	✓	✓		✓	✓	✓

Pos.	Description	Item. No.	Cross 6	Cross 5	Cross 5 XL	Prio	Transit	Xact	Crissy Active	Crissy Sw-Aw.
1	Rear wheel 24 Maxx hp plastic Speedlite excl axle	28951	✓	✓	✓	✓		✓	✓	✓
	Rear wheel 24 Maxx hp ti Speedlite excl axle	24088	✓	✓	✓	✓		✓	✓	✓
	Rear wheel 24 Maxx hp hard al Trailblazer R excl axle	28952-1	✓	✓	✓	✓		✓	✓	✓
	Rear wheel 24 Maxx hp hard al Trailblazer L excl axle	28952-2	✓	✓	✓	✓		✓	✓	✓
	Rear wheel 24 Maxx hp plastic Trailblazer R excl axle	28953-1	✓	✓	✓	✓		✓	✓	✓
	Rear wheel 24 Maxx hp plastic Trailblazer L excl axle	28953-2	✓	✓	✓	✓		✓	✓	✓
	Rear wheel 24 Maxx hp ti Trailblazer R excl axle	24116-1	✓	✓	✓	✓		✓	✓	✓
	Rear wheel 24 Maxx hp ti Trailblazer L excl axle	24116-2	✓	✓	✓	✓		✓	✓	✓
	Rear wheel 24 Maxx solid hard al excl axle	24126	✓	✓	✓	✓			✓	✓
	Rear wheel 24 Maxx solid ti excl axle	24127	✓	✓	✓	✓			✓	✓
	Rear wheel 24 Maxx solid plastic excl axle	24128	✓	✓	✓	✓			✓	✓
	Rear wheel 24 Maxx solid excl handrim and axle	84021	✓	✓	✓	✓		✓	✓	✓
	Rear wheel 24 Maxx solid hard al excl axle	24126	✓	✓	✓	✓		✓	✓	✓
	Rear wheel 24 Maxx solid ti excl axle	24127	✓	✓	✓	✓		✓	✓	✓
	Rear wheel 24 Maxx solid plastic excl axle	24128	✓	✓	✓	✓		✓	✓	✓
	25" Rear wheel									
1	Rear wheel 25 Maxx hp ti Trailblazer R exc axle	24117-1	✓					✓		
	Rear wheel 25 Maxx hp ti Trailblazer L excl axle	24117-2	✓					✓		
	Rear wheel 25 Maxx hp hard al Trailblazer R excl axle	28964-1	✓	✓	✓			✓		
	Rear wheel 25 Maxx hp hard al Trailblazer L excl axle	28964-2	✓	✓	✓			✓		
	Rear wheel 25 Maxx hp plastic Trailblazer R excl axle	28965-1	✓	✓	✓			✓		
	Rear wheel 25 Maxx hp plastic Trailblazer L excl axle	28965-2	✓	✓	✓			✓		
	Rear wheel 25 Maxx hp hard al Speedlite excl axle	24039	✓							
	Rear wheel 25 Maxx solid excl handrim and axle	84022	✓	✓	✓	✓		✓	✓	✓
	Rear wheel 25 Maxx solid hard al excl axle	24129	✓	✓	✓	✓		✓	✓	✓
	Rear wheel 25 Maxx solid ti excl axle	24130	✓	✓	✓	✓		✓	✓	✓
	Rear wheel 25 Maxx solid plastic excl axle	24131	✓	✓	✓	✓		✓	✓	✓
	26" Rear wheel									
	Rear wheel 26 C5 hp alu handrim aluminium excl axle	27570	✓	✓	✓					
	Rear wheel 26 C5 hp stainless handrim stainless excl axle	27572	✓	✓	✓					
2	**Axles**									
	QR-axle D12.7x110 Cross Crissy Prio	83872	✓	✓	✓	✓			✓	✓
	QR-axle D12.7x99	83492						✓		

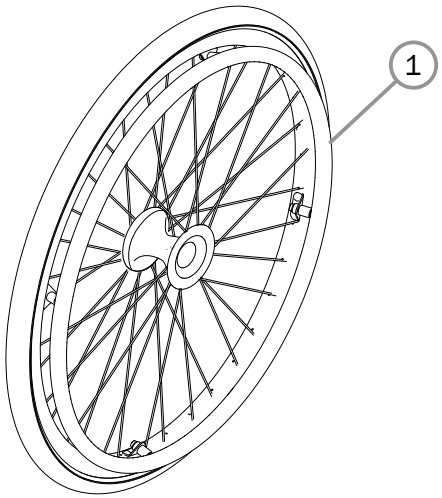

Pos.	Description	Item. No.	Cross 6	Cross 5	Cross 5 XL	Prio	Transit	Xact	Crissy Active	Crissy Sw-Aw.
	20" Rear wheel									
	Rear wheel 20 DB solid al excl axle	81337B	✓	✓	✓	✓		✓		
	Rear wheel 20 DB solid excl handrim and axle	83090B	✓	✓	✓	✓		✓		
	Rear wheel 20 DB solid ss	81338B	✓	✓	✓	✓		✓		
	22" Rear wheel									
1	Rear wheel 22 DB hp al excl axle	81342B	✓	✓	✓	✓		✓	✓	✓
	Rear wheel 22 DB solid al excl axle	81339B	✓	✓	✓	✓		✓	✓	✓
	Rear wheel 22 DB solid plastic excl axle	81340B	✓	✓	✓	✓		✓	✓	✓
	Rear wheel 22 DB solid handrim stainless	81341B	✓	✓	✓	✓		✓	✓	✓
	Rear wheel 22 DB hp plastic excl axle	81343B	✓	✓	✓	✓		✓	✓	✓
	Rear wheel 22 DB hp ss excl axle	81344B	✓	✓	✓	✓		✓	✓	✓
	24" Rear wheel									
	Rear wheel 24 drum brake solid handrim aluminium	81346B	✓	✓	✓	✓		✓	✓	✓
	Rear wheel 24 DB solid plastic excl axle	81347B	✓	✓	✓	✓		✓	✓	✓
1	Rear wheel 24 DB solid ss excl axle	81348B	✓	✓	✓	✓		✓	✓	✓
	Rear wheel 24 DB hp ss excl axle	28624B	✓	✓	✓	✓		✓	✓	✓
	Rear wheel 24 DB hp al excl axle	28625B	✓	✓	✓	✓		✓	✓	✓
	Rear wheel 24 DB hp plastic excl axle	28626B	✓	✓	✓	✓		✓	✓	✓
	16” Rear wheel									
1	Rear wheel 16 solid right black	83386				✓	✓			
	Rear wheel 16 solid left black	83387				✓	✓			

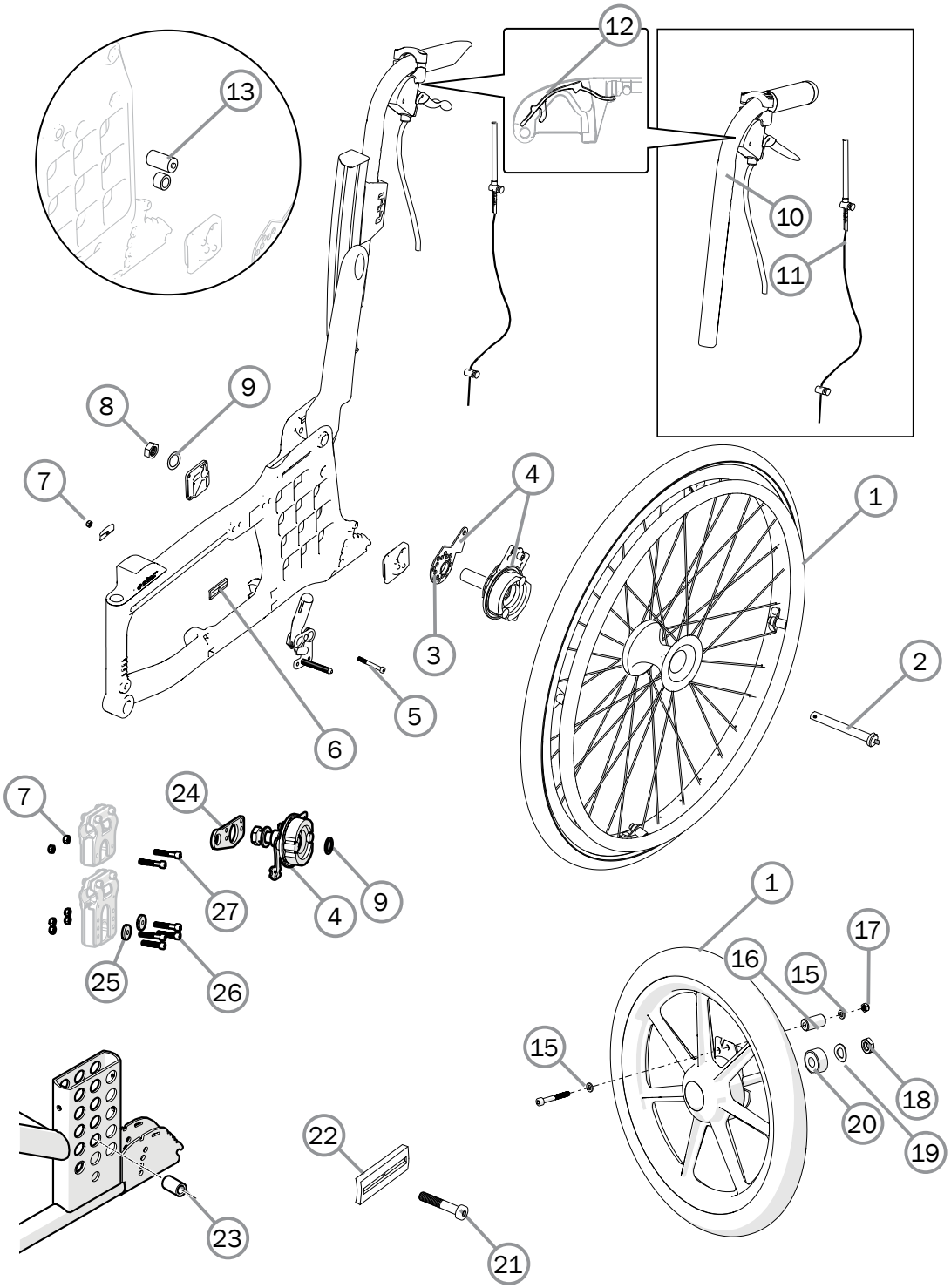

Pos.	Description	Item. No.	Cross 6	Cross 5	Cross 5 XL	Prio	Transit	Xact	Crissy Active	Crissy Sw-Aw.
2-9	Attachment kit drum brake	27627	✓	✓	✓					
2-9, 10	Drum brake C5 excl rear wheel	27890	✓	✓					✓	✓
	Drum brake C5 XL excl rear wheel	27891	✓		✓					
2	Qr axle drumbrake	81325	✓	✓	✓	✓		✓	✓	✓
3	Carrier drum brake Cross 5	82566	✓	✓	✓				✓	✓
4	Brake shoe Cross 5 right	27590	✓	✓	✓				✓	✓
	Brake shoe Cross 5 left	27591	✓	✓	✓				✓	✓
	Brake shoe kit drum brake R Prio	82822				✓		✓		
	Brake shoe kit drumbrake L Prio	82823				✓		✓		
5	Screw M6x55 MC6S	11351	✓	✓	✓					
6	Adapter brake 5 mm	51019	✓	✓	✓					
7	Locking nut M6 Zn8/P4 DIN 985-6	12035	✓	✓	✓			✓		
8	Nut M16x1 NV 24 B8 fzb	12052	✓	✓	✓					
9	Schnorr washer 17x24x1.3 fzb	13084	✓	✓	✓	✓		✓		
10-11	Push handle height adj Cross 100 incl drum brake handle and wire	27625-01	✓	✓				✓	✓	✓
	Push handle height adj Cr XL incl drum brake handle and wire100	27626-01	✓		✓					
10	Brake handle Prio compl	82585				✓		✓		
11	Wire kit drum brake Prio	82856				✓				
12	Wire lock brake handle 100 mm 10 pcs	82854	✓	✓	✓		✓		✓	✓
13	Attachment kit drum brake low	27628		✓	✓					
14	Screw M6x 45 MC6S 12.9 black					✓				
15	Washer brb 11.8x6.5x1.5					✓				
16	Spacer 6.5x15.9x30					✓				
17	Nut M6 Zn8/P4 DIN 985-6					✓				
18	Nut M12 FZB DIN 439B low	12076				✓				
19	Spring washer 13x24x1.2 DIN 137B fzb					✓				
20	Spacer 12x24x10					✓				
21	Screw M6x65 MC6S 12.9 fzb	11236				✓				
22	Adapter brake 5	51019				✓				
23	Adapter sleeve 16" Prio (2 pcs and assembly instruction) when mounting in pos A and B	28414				✓				
24	Attachment attendant brake	83974						✓		
25	Washer 6,4x22x4 zink plated	13062						✓		
26	Screw M6x35 MC6S	11533						✓		
27	Screw M6x30 MC6S	11398						✓		
2, 4, 7, 9-11, 24-27	Attendant brake kit cpl	24001						✓		

Pos.	Description	Item. No.	Cross 6	Cross 5	Cross 5 XL	Prio	Transit	Xact	Crissy Active	Crissy Sw-Aw.
1	Seat cushion Prio 40 cm short STD plush	27751-60				✓				
	Seat cushion Prio 40 cm short STD hygiene grey	27751-65				✓				
	Seat cushion Prio 45 cm short STD plush	27752-60				✓				
	Seat cushion Prio 45 cm short STD hygiene grey	27752-65				✓				
	Seat cushion Prio 50 cm short STD plush	27753-60				✓				
	Seat cushion Prio 50 cm short STD hygiene grey	27753-65				✓				
	Seat cushion Prio 55 cm short STD plush	27754-60				✓				
	Seat cushion Prio 55 cm short STD hygiene grey	27754-65				✓				
	Seat cushion Prio 40 cm short comfort plush	27755-60				✓				
	Seat cushion Prio 40 cm short comfort hygiene grey	27755-65				✓				
	Seat cushion Prio 45 cm short comfort plush	27756-60				✓				
	Seat cushion Prio 45 cm short comfort hygiene grey	27756-65				✓				
	Seat cushion Prio 50 cm short comfort plush	27757-60				✓				
	Seat cushion Prio 50 cm short comfort hygiene grey	27757-65				✓				
	Seat cushion Prio 55 cm short comfort plush	27758-60				✓				
	Seat cushion Prio 55 cm short comfort hygiene grey	27758-65				✓				
	Seat cushion basic W40 D46-50 Tidy	28055-65				✓				
	Seat cushion basic W45 D46-50 Tidy	28056-65				✓				
	Seat cushion basic W50 D46-50 Tidy	28057-65				✓				
	Seat cushion basic W55 D46-50 Tidy	28058-65				✓				
	Seat cushion Prio 40 cm long STD plush	27759-60				✓				
	Seat cushion Prio 40 cm long STD hygiene grey	27759-65				✓				
	Seat cushion Prio 45 cm long STD plush	27760-60				✓				
	Seat cushion Prio 45 cm long STD hygiene grey	27760-65				✓				
	Seat cushion Prio 50 cm long STD plush	27761-60				✓				
	Seat cushion Prio 50 cm long STD hygiene grey	27761-65				✓				
	Seat cushion Prio 55 cm long STD plush	27762-60				✓				
	Seat cushion Prio 55 cm long STD hygiene grey	27762-65				✓				
	Seat cushion Prio 40 cm long comfort plush	27763-60				✓				
	Seat cushion Prio 40 cm long comfort hygiene grey	27763-65				✓				
	Seat cushion Prio 45 cm long comfort plush	27764-60				✓				
	Seat cushion Prio 45 cm long comfort hygiene grey	27764-65				✓				
	Seat cushion Prio 50 cm long comfort plush	27765-60				✓				
	Seat cushion Prio 50 cm long comfort hygiene grey	27765-65				✓				

Pos.	Description	Item. No.	Cross 6	Cross 5	Cross 5 XL	Prio	Transit	Xact	Crissy Active	Crissy Sw-Aw.
	Seat cushion Prio 55 cm long comfort plush	27766-60				✓				
	Seat cushion Prio 55 cm long comfort hygiene grey	27766-65				✓				
	Seat cushion comfort W40 D42-46 Tidy	28569-65				✓				
	Seat cushion comfort W45 D42-46 Tidy	28570-65				✓				
	Seat cushion comfort W50 D42-46 Tidy	28571-65				✓				
	Seat cushion comfort W55 D42-46 Tidy	28572-65				✓				
	Seat cushion comfort W40 D46-50 Tidy	28565-65				✓				
	Seat cushion comfort W45 D46-50 Tidy	28566-65				✓				
	Seat cushion comfort W50 D46-50 Tidy	28567-65				✓				
	Seat cushion comfort W55 D46-50 Tidy	28568-65				✓				
	Cover seat cushion 40 (16) short plush Prio	63060-60				✓				
	Cover seat cushion 40 (16) long hygiene grey Prio	63060-65				✓				
	Cover seat cushion 45 (18) short plush Prio	63061-60				✓				
	Cover seat cushion 45 (18) long hygiene grey Prio	63061-65				✓				
	Cover seat cushion 50 (20) short plush Prio	63062-60				✓				
	Cover seat cushion 50 (20) long hygiene grey Prio	63062-65				✓				
	Cover seat cushion 55 (22) short plush Prio	63063-60				✓				
	Cover seat cushion 55 (22) long hygiene grey Prio	63063-65				✓				
	Cover seat cushion 40 (16) short plush Prio	63064-60				✓				
	Cover seat cushion 40 (16) long hygiene grey Prio	63064-65				✓				
	Cover seat cushion 45 (18) short plush Prio	63065-60				✓				
	Cover seat cushion 45 (18) long hygiene grey Prio	63065-65				✓				
	Cover seat cushion 50 (20) short plush Prio	63066-60				✓				
	Cover seat cushion 50 (20) long hygiene grey Prio	63066-65				✓				
	Cover seat cushion 55 (22) short plush Prio	63067-60				✓				
	Cover seat cushion 55 (22) long hygiene grey Prio	63067-65				✓				
	Cover seat 40 short Tidy	63159-65				✓				
	Cover seat 45 short Tidy	63160-65				✓				
	Cover seat 50 short Tidy	63161-65				✓				
	Cover seat 55 short Tidy	63162-65				✓				
	Cover Tidy B40 Dj42-46	63253-65				✓				
	Cover Tidy B45 Dj42-46	63254-65				✓				
	Cover Tidy B50 Dj42-46	63255-65				✓				
	Cover Tidy B55 Dj42-46	63256-65				✓				

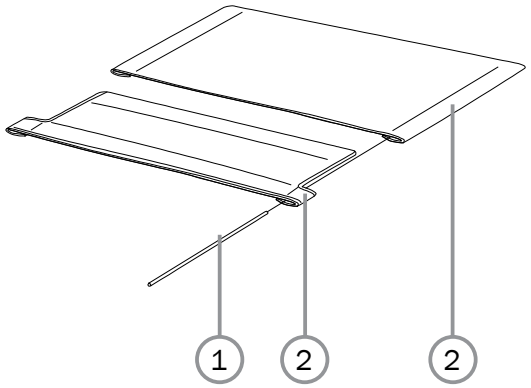

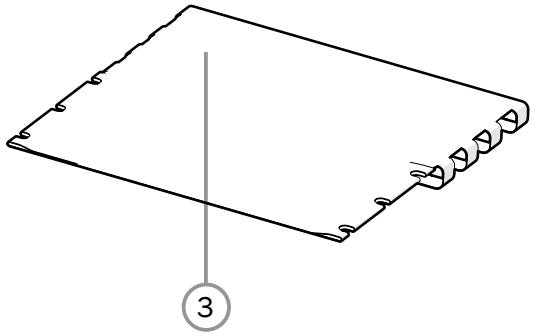

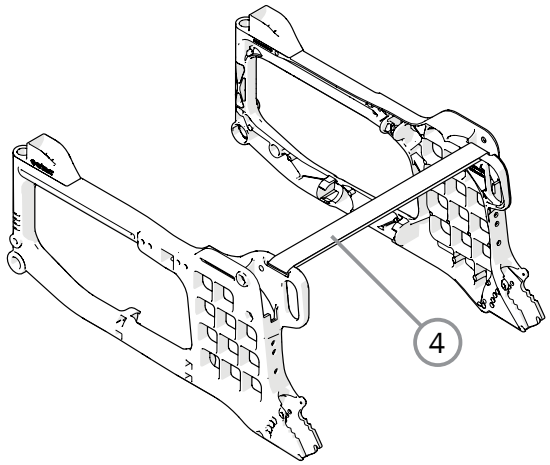

Pos.	Description	Item. No.	Cross 6	Cross 5	Cross 5 XL	Prio	Transit	Xact	Crissy Active	Crissy Sw-Aw.
1	Tension rod L381 short upholstery seat	80617	✓	✓	✓		✓		✓	✓
1-2	Upholstery seat Basic short Basic/Cross 3A 35 cm (14") black	62718-60	✓	✓	✓		✓			
	Upholstery seat Basic short Basic/Cross 3A 37.5 cm (15") black	62719-60	✓	✓	✓				✓	✓
	Upholstery seat Basic short Basic/Cross 3A 40 cm (16") black	62720-60	✓	✓	✓		✓		✓	✓
	Upholstery seat Basic short Basic/Cross 3A 42.5 cm (17") black	62721-60	✓	✓	✓				✓	✓
	Upholstery seat Basic short Basic/Cross 3A 45 cm (18") black	62722-60	✓	✓	✓		✓		✓	✓
	Upholstery seat Basic short Basic/Cross 3A 47.5 cm (19") black	62978-60	✓	✓	✓				✓	✓
	Upholstery seat Basic short Basic/Cross 3A 50 cm (20") black	62979-60	✓	✓	✓		✓		✓	✓
	Upholstery seat Basic short Basic/Cross 3A 52.5 cm (21") black	62980-60	✓		✓					
	Upholstery seat Basic short Basic/Cross 3A 55 cm (22”) black	62981-60			✓					
	Upholstery seat Basic short Basic/Cross 3A 57.5 cm (23”) black	62982-60			✓					
	Upholstery seat Basic short Basic/Cross 3A 60 cm (24”) black	62983-60			✓					
	Upholstery seat Basic long Basic/Cross 3A 35 cm (14") black	62728-60	✓	✓	✓					
	Upholstery seat Basic longBasic/Cross 3A 37.5 cm (15") black	62729-60	✓	✓	✓					
	Upholstery seat Basic long Basic/Cross 3A 40 cm (16") black	62730-60	✓	✓	✓					
	Upholstery seat Basic long Basic/Cross 3A 42.5 cm (17") black	62731-60	✓	✓	✓					
	Upholstery seat Basic long Basic/Cross 3A 45 cm (18") black	62732-60	✓	✓	✓					
1-2	Upholstery seat Basic long Basic/Cross 3A 47.5 cm (19") black	62984-60	✓	✓	✓					
	Upholstery seat Basic long Basic/Cross 3A 50 cm (20") black	62985-60	✓	✓	✓					
	Upholstery seat Basic long Basic/Cross 3A 52.5 cm (21") black	62986-60	✓		✓					
	Upholstery seat Basic long Basic/Cross 3A 55 cm (22”) black	62987-60			✓					
	Upholstery seat Basic long Basic/Cross 3A 57.5 cm (23”) black	62988-60			✓					
	Upholstery seat Basic long Basic/Cross 3A 60 cm (24”) black	62989-60			✓					
3	Seat upholstery 35 cm	63362-60						✓		
	Seat upholstery 37.5 cm	63363-60						✓		
	Seat upholstery 40 cm	63364-60						✓		
	Seat upholstery 42.5 cm	63365-60						✓		
	Seat upholstery 45 cm	63366-60						✓		
	Seat upholstery 47.5 cm	63367-60						✓		
	Seat upholstery 50 cm	63368-60						✓		
4	Seat extender 35-40 cm	63291	✓	✓					✓	✓
	Seat extender 42,5-50 cm	63292	✓	✓	✓				✓	✓
	Seat extender 52,5-60 cm	63293	✓	✓	✓					

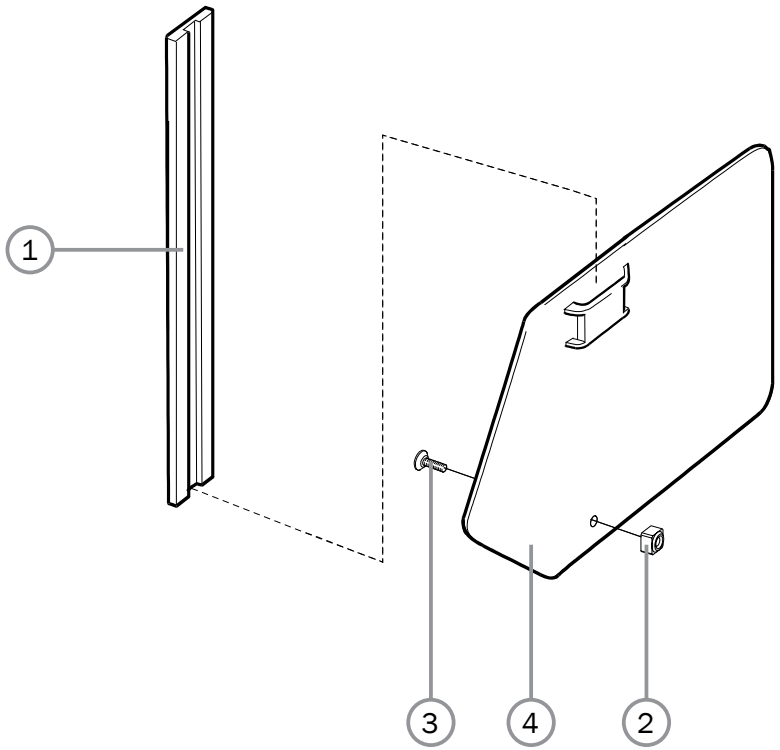

Pos.	Description	Item. No.	Cross 6	Cross 5	Cross 5 XL	Prio	Transit	Xact	Crissy Active	Crissy Sw-Aw.
1	Sideguard bracket Cross 6005 T6 SS4107-06	80631	✓	✓	✓				✓	✓
2	Stop bar for arm support	80661	✓	✓	✓				✓	✓
3	Screw M5x14 MF6S 10.9 black	11237	✓	✓	✓				✓	✓
4	Sideguard Cross/M100 nylon right	50316	✓	✓	✓				✓	✓
	Sideguard Cross/M100 nylon left	50317	✓	✓	✓				✓	✓
1-4	Sideguard Cross right black	25189-1	✓	✓	✓				✓	✓
	Sideguard Cross left black	25189-2	✓	✓	✓				✓	✓

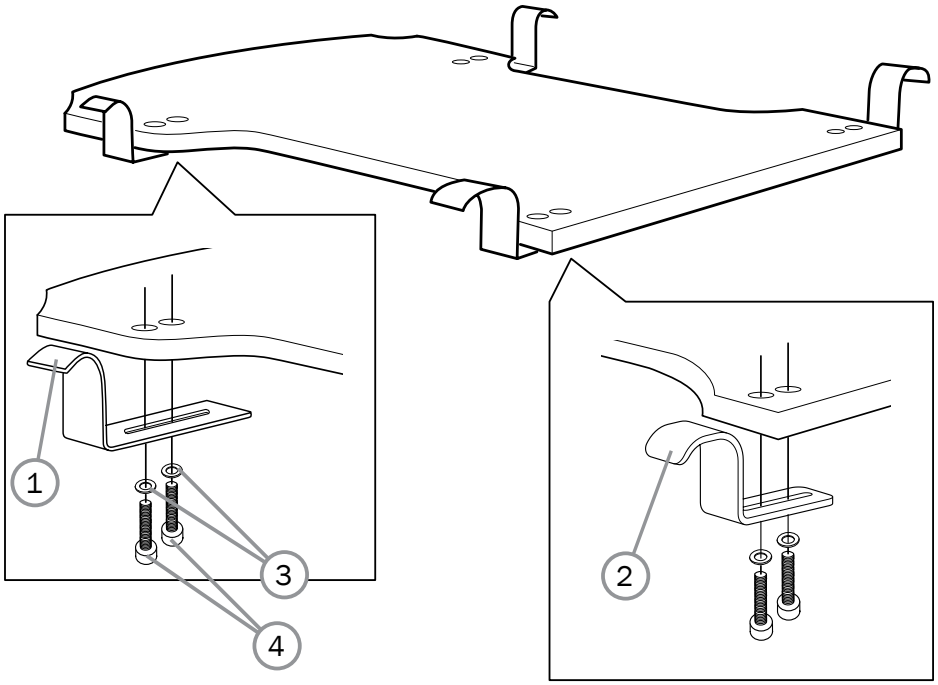

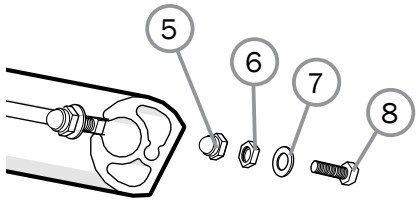

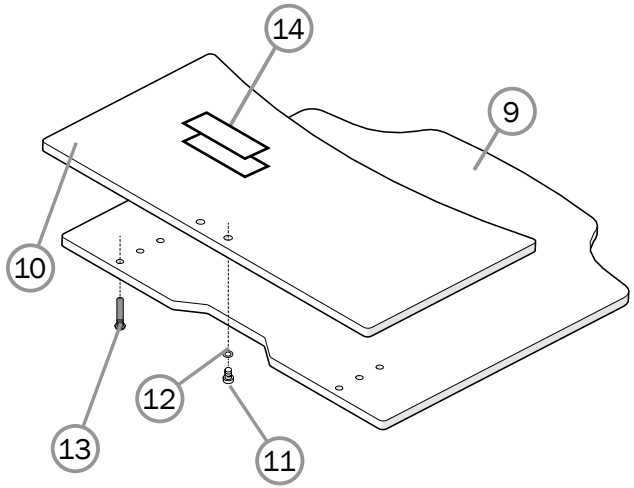

Pos.	Description	Item. No.	Cross 6	Cross 5	Cross 5 XL	Prio	Transit	Xact	Crissy Active	Crissy Swr-Aw.
1	Seat hook back ECS	26414-01	✓	✓	✓					
2	Seat hook front wide	83442	✓	✓	✓					
3	Washer BRB 5.3 zink plated	13017	✓	✓	✓					
4	Screw M5x18 MC6S 8.8 zink plated	11424	✓	✓	✓					
5	Domed not M4 zink plated	12068	✓	✓	✓					
6	Nut M4 M6M zink plated	12067	✓	✓	✓					
7	Washer 4.3x9x0.8 zink plated	13066	✓	✓	✓					
8	Screw M4x12 M6S A2	11707	✓	✓	✓					
1-8	Solid seat ECS 35-37.5 cm (14"-15") std compl	26720	✓	✓	✓					
	Solid seat ECS 40-42.5 cm (16"-17") std compl	26721	✓	✓	✓					
	Solid seat ECS 45-47.5 cm (18"-19") std compl	26722	✓	✓	✓					
	Solid seat ECS 50-52.5 cm (20"-21") std compl	26723	✓	✓	✓					
	Solid seat ECS 35-37.5 cm (14"-15") long compl	26725	✓	✓	✓					
	Solid seat ECS 40-42.5 cm (16"-17") long compl	26726	✓	✓	✓					
	Solid seat ECS 45-47.5 cm (18"-19") long compl	26727	✓	✓	✓					
	Solid seat ECS 50-52.5 cm (20"-21") long compl	26728	✓	✓	✓					

Pos.	Description	Item. No.	Cross 6	Cross 5	Cross 5 XL	Prio	Transit	Xact	Crissy Active	Crissy Swr-Aw.
9	Seat solid lower 40 cm Prio	83448				✓				
	Seat solid lower 45 cm Prio	83449				✓				
	Seat solid lower 50 cm Prio	83450				✓				
	Seat solid lower 55 cm Prio	83451				✓				
	Seat plastic lower 40 cm Prio	51233				✓				
	Seat plastic lower 45 cm Prio	51234				✓				
	Seat plastic lower 50 cm Prio	51235				✓				
	Seat plastic lower 55 cm Prio	51236				✓				
10	Seat solid upper cpl 40 short Prio	82952				✓				
	Seat solid upper cpl 45 short Prio	82953				✓				
	Seat solid upper cpl 50 short Prio	82954				✓				
	Seat solid upper cpl 55 short Prio	82955				✓				
	Seat solid upper cpl 40 long Prio plastic	51125				✓				
	Seat solid upper cpl 45 long Prio plastic	51126				✓				
	Seat solid upper cpl 50 long Prio plastic	51127				✓				
	Seat solid upper cpl 55 long Prio plastic	51128				✓				
11	Screw M6x16 MC6S 12.9	11253				✓				
12	Washer 6.4x12x1.6 Zn8/P4	13030				✓				
13	Fixing pin	51114				✓				
14	Velcro kit	28183				✓				

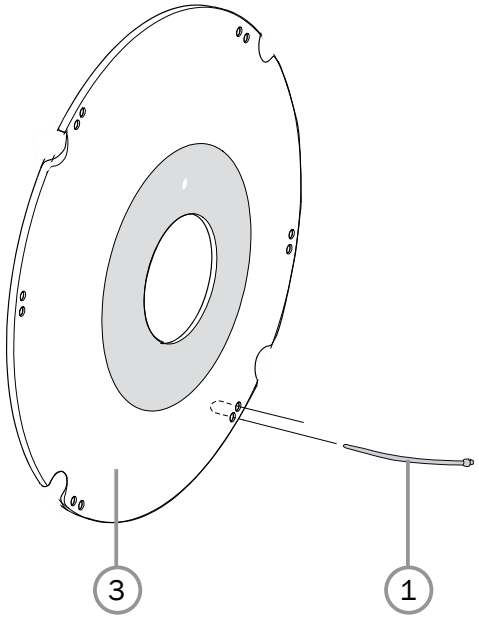

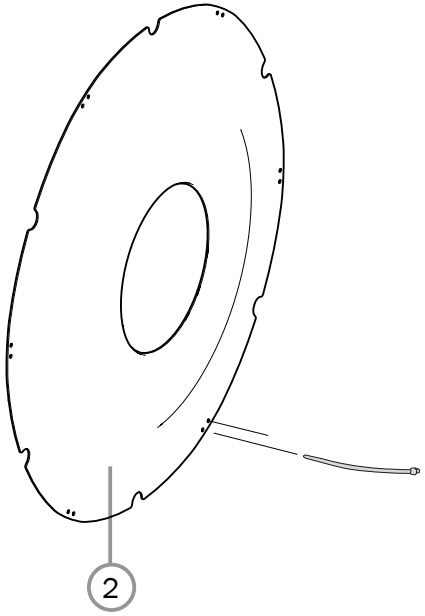

Pos.	Description	Item. No.	Cross 6	Cross 5	Cross 5 XL	Prio	Transit	Xact	Crissy Active	Crissy Sw-Aw.
1	Attachment kit spokeguard	26276	✓	✓	✓	✓		✓	✓	✓
1-2	Spoke guard 20” cpl C6/Maxx	28934	✓	✓	✓	✓		✓	✓	✓
	Spoke guard 22” cpl C6/Maxx	28935	✓	✓	✓	✓		✓	✓	✓
	Spoke guard 24” cpl C6/Maxx	28936	✓	✓	✓	✓		✓	✓	✓
1, 3	Spoke guard 20" with logo Etac grey	25502-28	✓	✓	✓	✓				
	Spoke guard 20" AB with logo Etac grey	28816-28	✓	✓	✓	✓				
	Spoke guard 22" with logo Etac grey	25503-28	✓	✓	✓	✓			✓	✓
	Spoke guard 22" AB with logo Etac grey	28817-28	✓	✓	✓	✓				
	Spoke guard 24" with logo Etac grey	25504-28	✓	✓	✓	✓			✓	✓
	Spoke guard 24" AB with logo Etac grey	28818-28	✓	✓	✓	✓			✓	✓

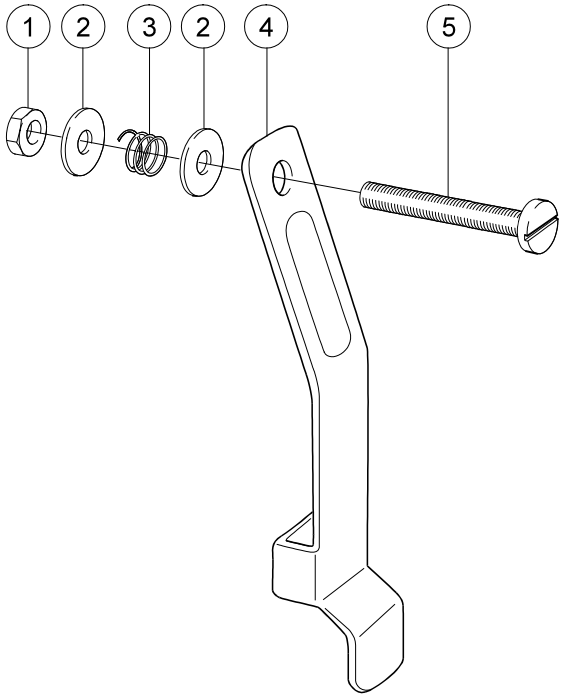

Pos.	Description	Item. No.	Cross 6	Cross 5	Cross 5 XL	Prio	Transit	Xact	Crissy Active	Crissy Sw-Aw.
1	Locking nut M 5 DIN 985-6 zink plated	12003	✓	✓	✓					
2	Washer 6.4x 14x 1.55 alu	13010	✓	✓	✓					
3	Spring 1.5 inv 6 L15 zink plated	80019	✓	✓	✓					
4	Tongue tetraknob black	24040-01	✓	✓	✓					
5	Screw M 5x 35 zink plated	11001	✓	✓	✓					
1-5	Tetra quick release adapt black	24051-01	✓	✓	✓					

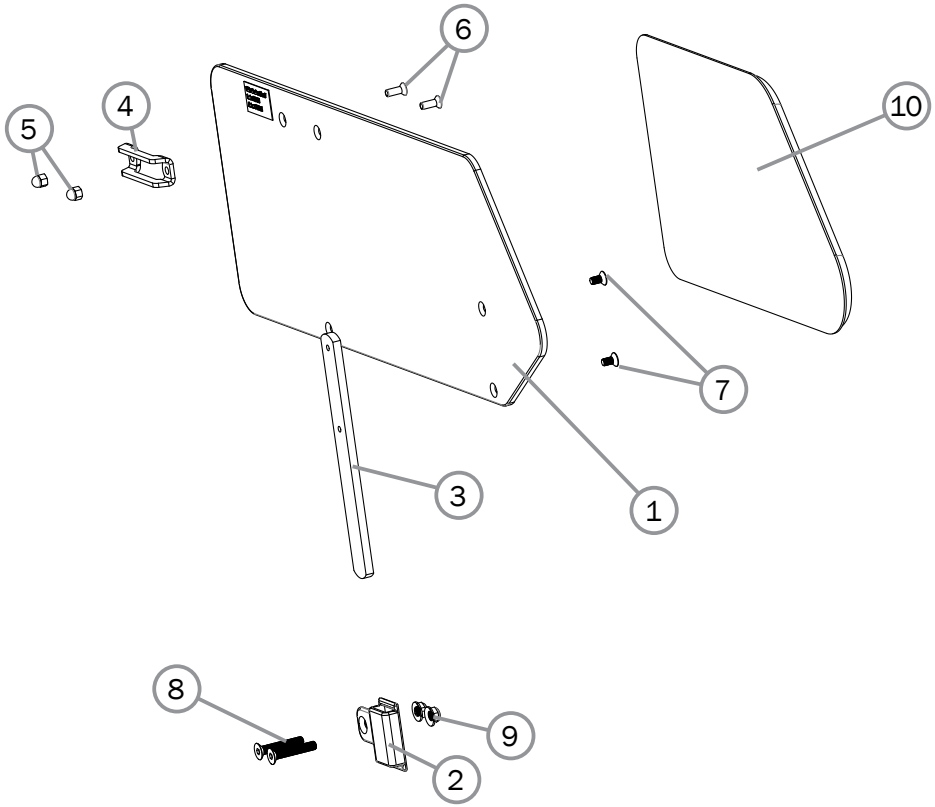

Pos.	Description	Item. No.	Cross 6	Cross 5	Cross 5 XL	Prio	Transit	Xact	Crissy Active	Crissy Sw-Aw.
1-9	Thigh support short right compl	27391-1	✓	✓	✓					
	Thigh support short left compl	27391-2	✓	✓	✓					
	Thigh support long right compl	27392-1	✓	✓	✓					
	Thigh support long left compl	27392-2	✓	✓	✓					
1	Thigh support short	82523	✓	✓	✓					
	Thigh support long	82524	✓	✓	✓					
2	Attachment thigh support	82489	✓	✓	✓					
3	Attachment plate thigh support	82490	✓	✓	✓					
4	Attachment plate	82408	✓	✓	✓					
5	Locking nut M5 domed zink plated	12168	✓	✓	✓					
6	Screw M5x14 MF6S 10.9 black	11237	✓	✓	✓					
7	Screw M5x10 MF6S 8.8 zink plated	11689	✓	✓	✓					
8	Screw MF6S M6x30 fzb Esloc	11639	✓	✓	✓					
9	Locking nut M6 black	12169	✓	✓	✓					
10	Soft pad thigh support right compl	82488-1	✓	✓	✓					
	Soft pad thigh support left compl	82488-2	✓	✓	✓					

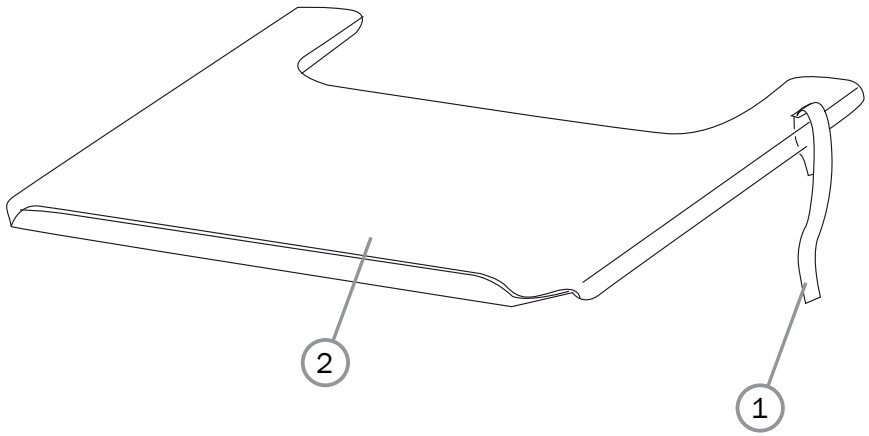

Pos.	Description	Item. No.	Cross 6	Cross 5	Cross 5 XL	Prio	Transit	Xact	Crissy Active	Crissy Sw-Aw.
1	Strap for tray 27.5-50 cm (11"-20")	62103	✓	✓	✓		✓		✓	✓
	Attachment strap Hemi tray	82921				✓				
2	Tray 45 cm compl for wheelchair 35 cm (14")	24417	✓	✓			✓			
	Tray 47.5 cm compl for wheelchair 37.5 cm (15")	25187	✓	✓					✓	✓
	Tray 50 cm compl for wheelchair 40 cm (16")	24418	✓	✓			✓		✓	✓
	Tray Prio 40 cm table width 57.5 cm	27971				✓				
	Tray 52.5 cm compl for wheelchair 42.5 cm (17")	25188	✓	✓					✓	✓
	Tray 55 cm compl for wheelchair 45 cm (18")	24419	✓	✓			✓		✓	✓
	Tray Prio 45 cm table width 62.5 cm	27972				✓				
	Tray 57.5 cm compl for wheelchair 47.5 cm (19")	25731	✓	✓	✓				✓	✓
	Tray 60 cm compl for wheelchair 50 cm (20")	24601	✓	✓	✓		✓			
	Tray Prio 50 cm table width 67.5 cm	27973				✓				
	Tray 62.5 cm for 52.5 cm chair compl	26020	✓		✓					
	Tray 65 cm for 55 cm chair compl	26021	✓		✓					
	Tray Prio 55 cm table width 72.5 cm	27974				✓				
	Tray 67.5 cm for 57.5 cm chair compl	26022	✓		✓					
	Tray 70 cm for 60 cm chair compl	26907	✓		✓					

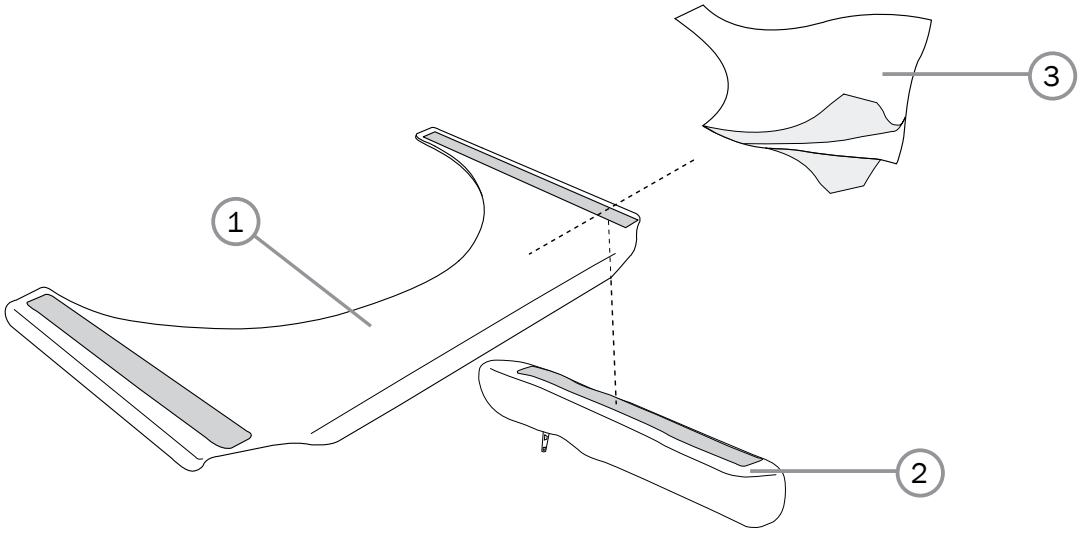

Pos.	Description	Item. No.	Cross 6	Cross 5	Cross 5 XL	Prio	Transit	Xact	Crissy Active	Crissy Sw-Aw.
2	Cover arm support table hemi short with Velcro	81631	✓	✓	✓		✓		✓	✓
	Cover arm support table hemi long with Velcro	81632	✓	✓	✓		✓		✓	✓
3	Anti glide table hemi 35-50 cm	81633	✓	✓	✓		✓		✓	✓
1-2	Tray hemi 45 cm for wheelchair 35 cm (14) with short arm support cover	26556	✓	✓			✓			
	Tray hemi 47.5 cm for wheelchair 37.5 cm (15) with short arm support cover	26557	✓	✓					✓	✓
	Tray hemi 50 cm for wheelchair 40 cm (16) with short arm support cover	26558	✓	✓		✓	✓		✓	✓
	Tray hemi 52.5 cm for wheelchair 42.5 cm (17) with short arm support cover	26559	✓	✓					✓	✓
	Tray hemi 55 cm for wheelchair 45 cm (18) with short arm support cover	26560	✓	✓			✓		✓	✓
	Tray hemi 57.5 cm for wheelchair 47.5 cm (19) with short arm support cover	26561	✓	✓	✓	✓			✓	✓
	Tray hemi 60 cm for wheelchair 50 cm (20) with short arm support cover	26562	✓	✓	✓		✓		✓	✓
	Tray hemi 45 cm for wheelchair 35 cm (14) with long arm support cover	26563	✓	✓			✓			
	Tray hemi 47.5 cm for wheelchair 37.5 cm (15) with long arm support cover	26564	✓	✓		✓			✓	✓
	Tray hemi 50 cm for wheelchair 40 cm (16) with long arm support cover	26565	✓	✓			✓		✓	✓
	Tray hemi 52.5 cm for wheelchair 42.5 cm (17) with long arm support cover	26566	✓	✓					✓	✓
	Tray hemi 55 cm for wheelchair 45 cm (18) with long arm support cover	26567	✓	✓		✓	✓		✓	✓
	Tray hemi 57.5 cm for wheelchair 47.5 cm (19) with long arm support cover	26568	✓	✓	✓				✓	✓
	Tray hemi 60 cm for wheelchair 50 cm (20) with long arm support cover	26569	✓	✓	✓		✓		✓	✓

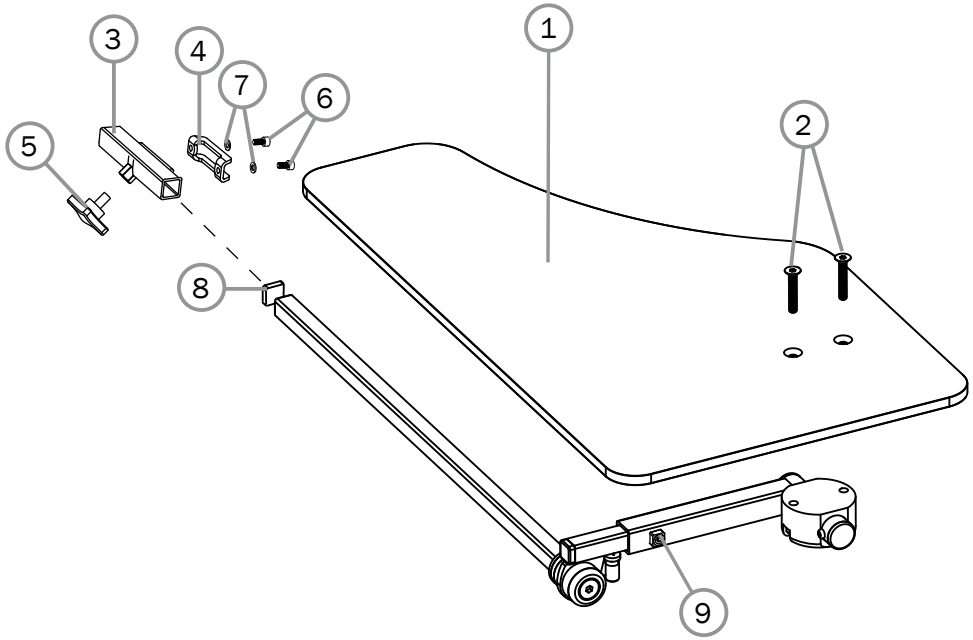

Pos.	Description	Item. No.	Cross 6	Cross 5	Cross 5 XL	Prio	Transit	Xact	Crissy Active	Crissy Sw-Aw.
1	Plate Tray hemi	82420	✓	✓	✓	✓		✓	✓	✓
2	Screw M6x35 MF6S 8.8 black	11287	✓	✓	✓	✓		✓	✓	✓
3	Attachment arm support	27356	✓	✓	✓	✓		✓	✓	✓
4	Attachment plate arm support	82408	✓	✓	✓	✓		✓	✓	✓
5	Locking wheel M8x14mm L	400118	✓	✓	✓	✓		✓	✓	✓
6	Screw M5x8 MC6S black	11414	✓	✓	✓	✓		✓	✓	✓
7	Spring washer 5,3x10x0,5	13026	✓	✓	✓	✓		✓	✓	✓
8	End stop IFR 1515-1,5s	50972	✓	✓	✓	✓		✓	✓	✓
9	Stop screw M6x10	11614	✓	✓	✓	✓		✓	✓	✓
1-9	Tray Hemi/Communicatin half right	27352-1	✓	✓	✓	✓		✓	✓	✓
	Tray Hemi/Communicatin half left	27352-2	✓	✓	✓	✓		✓	✓	✓
3-7	Attachment hemi table	28806	✓	✓	✓	✓		✓	✓	✓

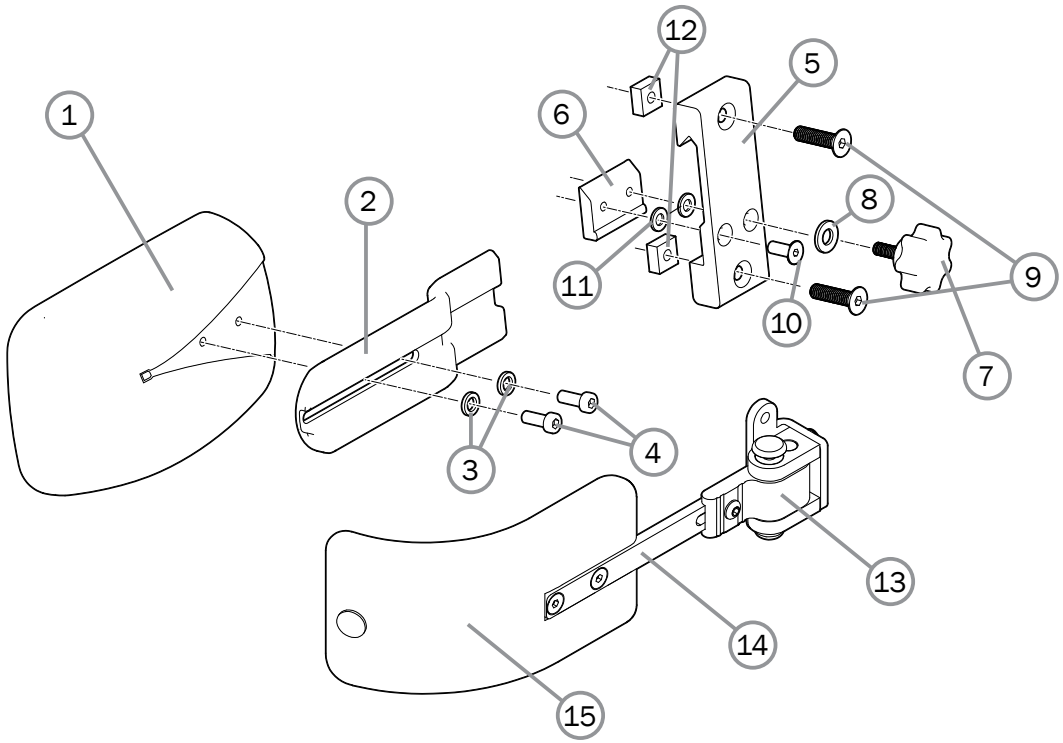

Pos.	Description	Item. No.	Cross 6	Cross 5	Cross 5 XL	Prio	Transit	Xact	Crissy Active	Crissy Sw-Aw.
1	Trunk supp pad curved small Dartex Cross back mod 3	82491	✓	✓	✓	✓				
2	Bracket trunk support	82507	✓	✓	✓	✓				
3	Spring washer 6.1x9.9x1.6 DIN 7980	13014	✓	✓	✓	✓				
4	Screw M 5x 12 K6S 10.9 zink plated	11208	✓	✓	✓	✓				
5	Attachment arm support Elite/Sting without screws	80403	✓	✓	✓	✓				
6	Locking plate arm support	80292	✓	✓	✓	✓				
7	Knob M5x15 leg support amputee Cross	80807	✓	✓	✓	✓				
8	Washer BRB 5.3x15x1.2 black	13004	✓	✓	✓	✓				
9	Screw M6x25 MF6S black esloc	11430	✓	✓	✓	✓				
10	Screw M5x14 MF6S 10.9 black	11237	✓	✓	✓	✓				
11	Washer 5.3x10x0.5m DIN 137A zink plated	13026	✓	✓	✓	✓				
12	Nut M6 FK4M	12166	✓	✓	✓	✓				
13	Attachment trunk support swing away R compl	27947-1	✓	✓	✓	✓				
	Attachment trunk support swing away L compl	27947-2	✓	✓	✓	✓				
14	Bar trunk support swing away L straight 12	27948	✓	✓	✓	✓				
15	Cushion trunk support medium bent black H 6.5 L 17	27949	✓	✓	✓	✓				
	Cushion trunk support large bent black H 9 cm L 19	27950	✓	✓	✓	✓				
1-12	Trunk support Cross back mod 3 incl attachment	27395	✓	✓	✓	✓				

Pos.	Description	Item. No.	Cross 6	Cross 5	Cross 5 XL	Prio	Transit	Xact	Crissy Active	Crissy Sw-Aw.
1	Trunk support bar -45 mm	83002	✓	✓	✓	✓				
2	Trunk support bar -15 mm	83017	✓	✓	✓	✓				
3	Trunk support bar 0 mm	83018	✓	✓	✓	✓				
4	Trunk support bar +15 mm	83019	✓	✓	✓	✓				
5	Trunk support bar ssb -0 mm	83046	✓	✓	✓	✓				
6	Trunk support bar ssb -15 mm	83045	✓	✓	✓	✓				
7	Trunk support bar ssb -45 mm	83001	✓	✓	✓	✓				
8	Trunk support attachment 3A compl	28146	✓	✓	✓	✓				
9	Trunk support pad straight compl	28276	✓	✓	✓	✓				

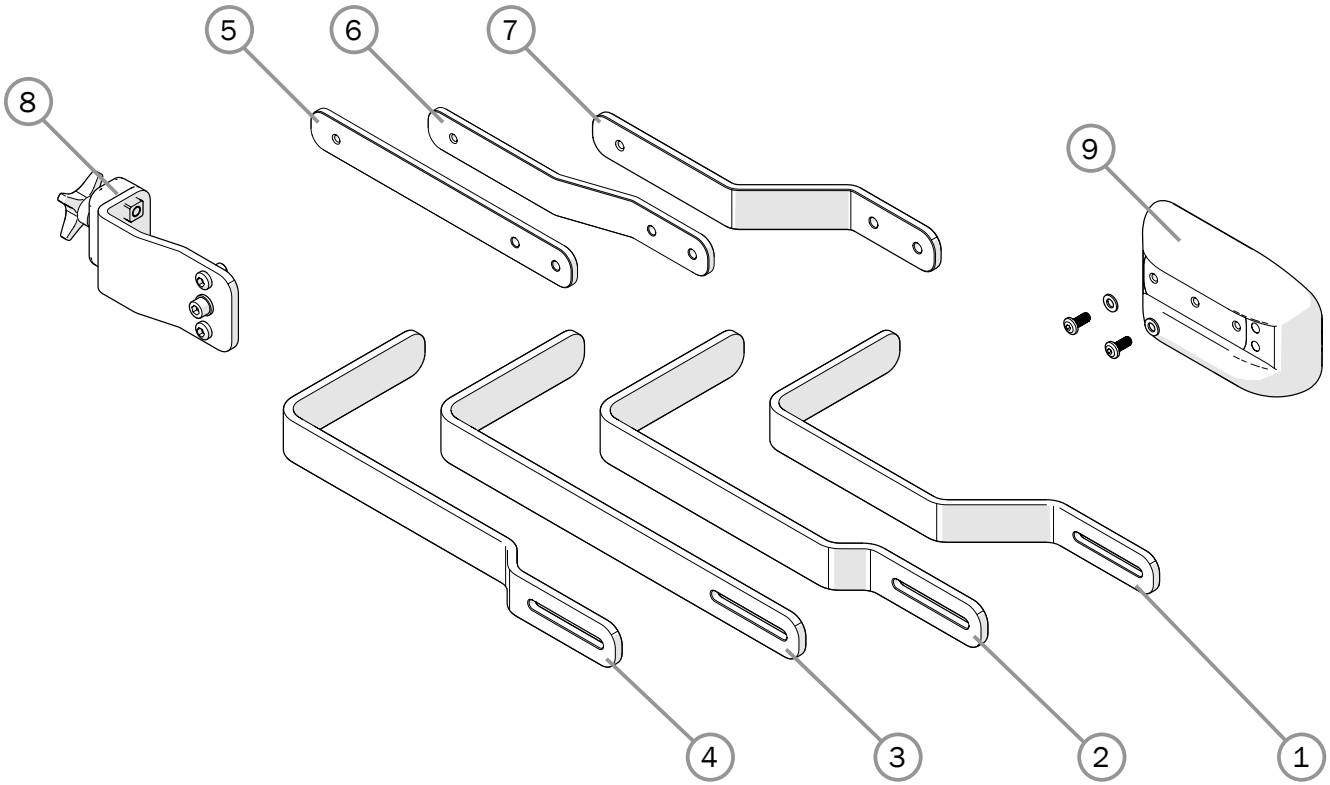

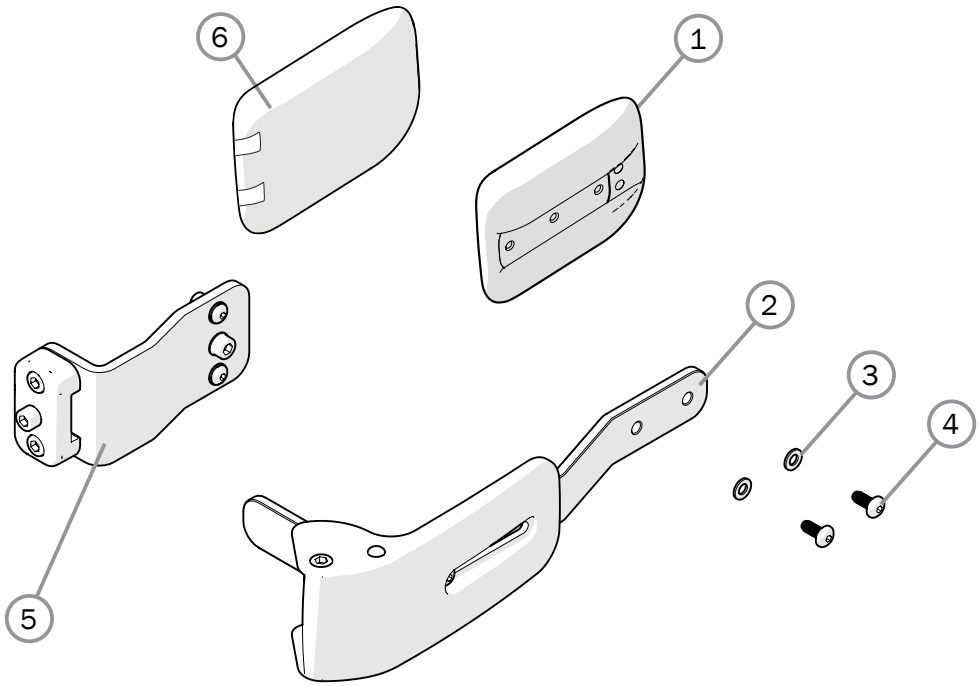

Pos.	Description	Item. No.	Cross 6	Cross 5	Cross 5 XL	Prio	Transit	Xact	Crissy Active	Crissy Sw-Aw.
1	Trunk support pad	83005	✓	✓	✓	✓				
2	Trunk support arm		✓	✓	✓	✓				
3	Washer 5.3x10x1 BRB DIN 125	13017	✓	✓	✓	✓				
4	Screw M5x12 K6S 10.9	11208	✓	✓	✓	✓				
5	Trunk support attachment 3A compl	28146	✓	✓	✓	✓				
6	Cover trunk support	28647	✓	✓	✓	✓				
	See previous page for different bars		✓	✓	✓	✓				
1-5	Trunk support Prio incl attachment right	28181-1	✓	✓	✓	✓				
	Trunk support Prio incl attachment left	28181-2	✓	✓	✓	✓				
	Trunk support Prio incl attachment right -15 mm	28180-1	✓	✓	✓	✓				
	Trunk support Prio incl attachment left -15 mm	28180-2	✓	✓	✓	✓				
	Trunk support Prio incl attachment right -45 mm	28141-1	✓	✓	✓	✓				
	Trunk support Prio incl attachment left -45 mm	28141-2	✓	✓	✓	✓				

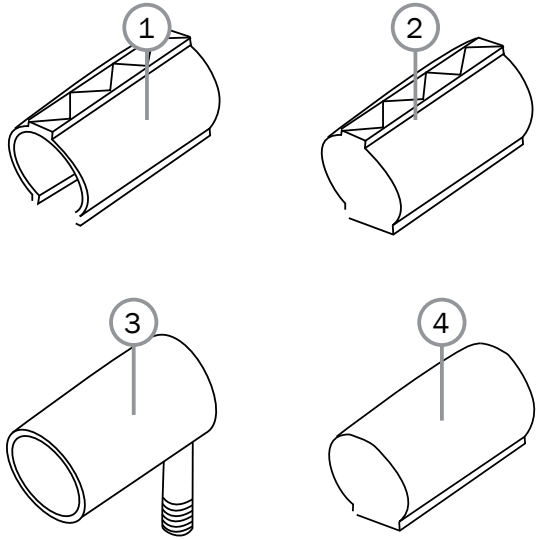

Pos.	Description	Item. No	Cross 6	Cross 5	Cross 5 XL	Prio	Transit	Xact	Crissy Active	Crissy Sw-Aw.
1	Tyre 22"x1" pneumatic high pressure	81125	✓	✓	✓	✓			✓	✓
	Tyre 24” Schwalbe Marathon plus	83301	✓	✓	✓	✓			✓	✓
2	Tyre 20" solid	80787	✓	✓	✓	✓				
	Tyre 24" solid grey	80768	✓	✓	✓	✓			✓	✓
4	Innertube 22" pneumatic high pressure	80136	✓	✓	✓	✓			✓	✓
	Innertube 24" pneumatic high pressure	80560	✓	✓	✓	✓			✓	✓
	Tube 24"x1" high pressure for carbon	82908	✓	✓					✓	✓
5	Tyre flaps 24" for carbon	82909	✓	✓					✓	✓
	Tyre flaps 24”	97044	✓	✓	✓					

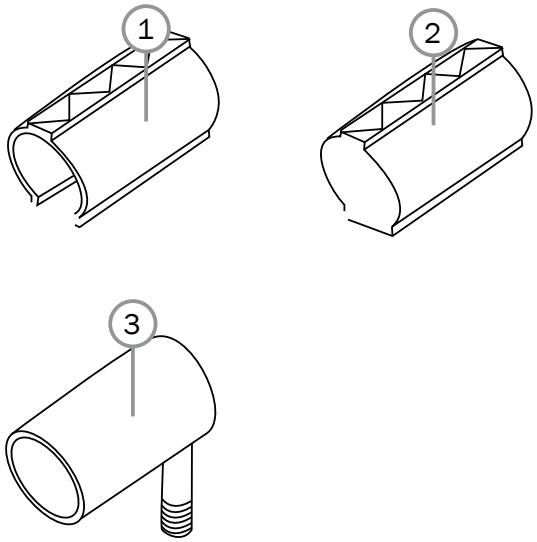

Pos.	Description	Art. No.	Cross 6	Cross 5	Cross 5 XL	Prio	Transit	Xact	Crissy Active	Crissy Sw-Aw.
1	Tyre 20x1 (25-451) Speedlite black	83897	✓	✓	✓	✓		✓		
	Tyre 22x1 (25-501) Speedlite black	83898	✓	✓	✓	✓		✓	✓	✓
	Tyre 22x1 (25-501) Trailblazer	83350						✓	✓	✓
	Tyre 24x1 (25-540) Speedlite black	83899	✓	✓	✓	✓		✓	✓	✓
	Tyre 24x1 (25-540) Trailblazer	83351						✓	✓	✓
	Tyre 25x1 (25-559) Trailblazer black	83900	✓	✓	✓			✓		
2	Tyre 20x1 3/8 (37-451) solid black	83347	✓	✓	✓	✓		✓		
	Tyre 22x1 3/8 (37-501) solid black	83348	✓	✓	✓	✓		✓	✓	✓
	Tyre 24x1 1/4 (32-540) solid black	83349	✓	✓	✓	✓		✓	✓	✓
	Tyre 22x1 (25-501) solid black	84017	✓	✓	✓	✓		✓	✓	✓
	Tyre 24x1 (25-540) solid black	84018	✓	✓	✓	✓		✓	✓	✓
	Tyre 25x1 (25-559) solid black	84019	✓	✓	✓	✓		✓	✓	✓
3	Inner tube 20x1 (25-451) high pressure	82199	✓	✓	✓	✓		✓		
	Inner tube 22x1 (25-501) high pressure	80136	✓	✓	✓	✓		✓	✓	✓
	Inner tube 24x1 (25-540) high pressure	80560	✓	✓	✓	✓		✓	✓	✓
	Inner tube 25x1 (25-559) high pressure	83904	✓	✓	✓	✓		✓		

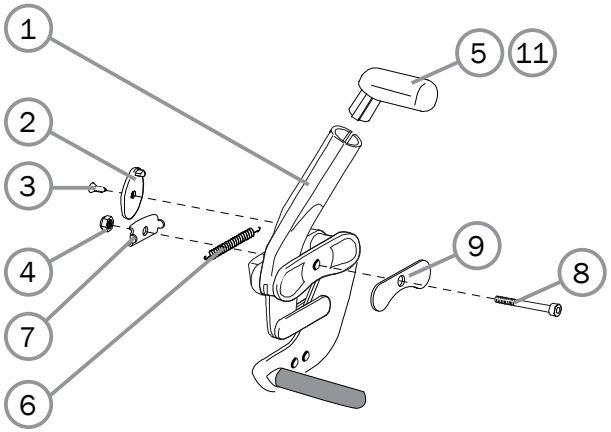

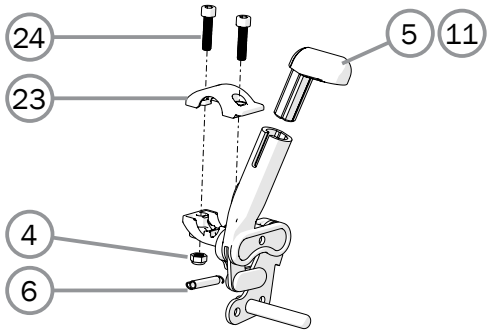

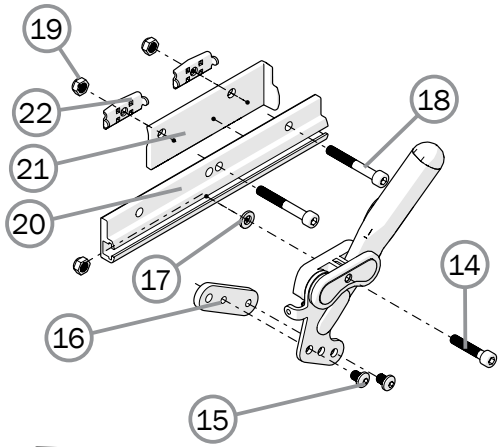

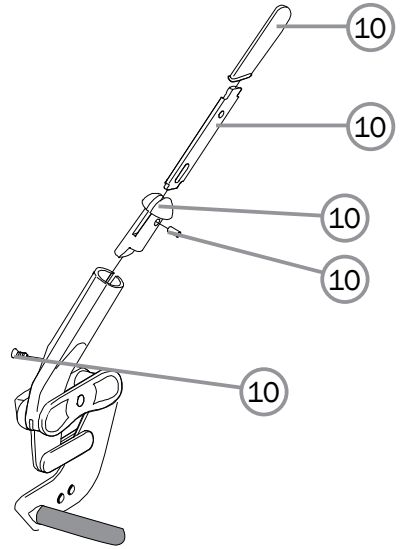

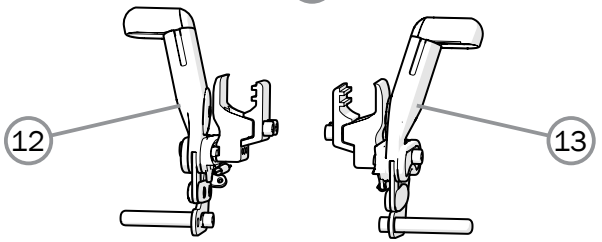

Pos.	Description	Item. No.	Cross 6	Cross 5	Cross 5 XL	Prio	Transit	Xact	Crissy Active	Crissy Sw-Aw.
1	Brake right Brake left		✓	✓	✓	✓			✓	✓
2	Stop detail brake Cross mod new	50373	✓	✓	✓	✓			✓	✓
3	Screw B 6 3.5x 9.5 FXS black	11384	✓	✓	✓	✓			✓	✓
4	Locking nut M 6 zink plated	12017	✓	✓	✓	✓			✓	✓
5	Plug for brake angled red	51012	✓	✓	✓	✓		✓	✓	✓
	Plug for brake angled black	50395				✓		✓	✓	✓
6	Spring for brake Cross	80796	✓	✓	✓	✓			✓	✓
7	Washer inner brake mod 3	82564	✓	✓	✓	✓				
8	Screw M6x50 MC6S zink plated	11433	✓	✓	✓					
	Screw M6x60 MC6S	11408				✓				
9	Washer outer brake mod 3	82575	✓	✓	✓	✓				
10	Brake lever extension Cross compl	25515	✓	✓	✓	✓			✓	✓
1-4, 6-10	Brake Cross extended handle right	27530-1	✓	✓	✓					
	Brake Cross extended handle left	27530-2	✓	✓	✓					
	User brake extension handle R Prio	27895-1				✓				
	User brake extension handle L Prio	27895-2				✓				
1-6, 10, 23-24,	Brake M100/Crissy with extended handle foldable right	28455-1							✓	✓
	Brake M100/Crissy with extended handle foldable left	28455-2							✓	✓
11	Brake handle angled compl kit red	27574	✓	✓	✓				✓	✓
	Brake handle angled compl kit black	25537	✓	✓	✓				✓	✓
12	Brake knee lever red R cpl	28916-1						✓		
	Brake knee lever black R cpl	28917-1						✓		
13	Brake knee lever red L cpl	28916-2						✓		
	Brake knee lever black L cpl	28917-2						✓		
14-22	Adapter brake Prio 16/20	28654				✓				
14	Screw M6x45 MC6S 12.9 black					✓				
15	Screw K6S M6x8 10.9 black					✓				
16	Adapter brake arm Prio 20-22					✓				
15-16	Adapter brake Prio 22	28403				✓				

Pos.	Description	Item. No.	Cross 6	Cross 5	Cross 5 XL	Prio	Transit	Xact	Crissy Active	Crissy Sw-Aw.
17	Washer 6.4x16x1,6					✓				
18	Screw M6x30 MC6S					✓				
19	Locking nut M 6 zink plated	12017				✓				
20	Attachment brake					✓				
21	Spacer brake adapter right Prio	51148-1				✓				
	Spacer brake adapter left Prio	51148-2				✓				
22	Washer inner brake mod 3	82564				✓				
23	Clamp brake	51177							✓	✓
24	Screw M6x25 MC6S 8.8 zink plated	11033							✓	✓
1-8	Brake with angled black handle right	27532-1	✓	✓	✓					
	Brake with angled black handle left	27532-2	✓	✓	✓					
	Brake with angled red handle right	27528-1	✓	✓	✓					
	Brake with angled red handle left	27528-2	✓	✓	✓					
1-9	User brake angle red handle R Prio	27951-1				✓				
	User brake angle red handle L Prio	27951-2				✓				
	User brake angle black handle R Prio	27894-1				✓				
	User brake angle black handle L Prio	27894-2				✓				
1-6, 23-24	Brake with angled black handle right	28444-1							✓	✓
	Brake with angled black handle left	28444-2							✓	✓
	Brake with angled red handle right	28446-1							✓	✓
	Brake with angled red handle left	28446-2							✓	✓

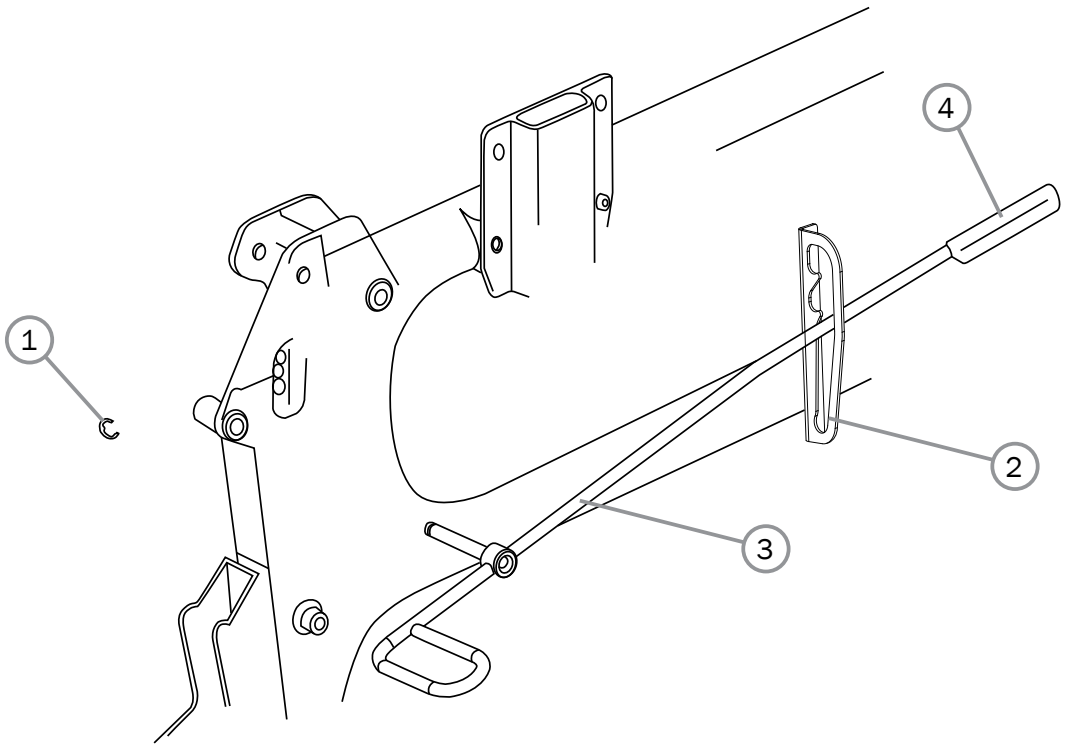

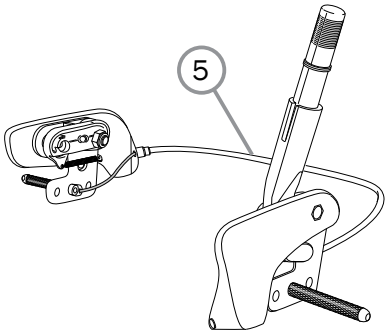

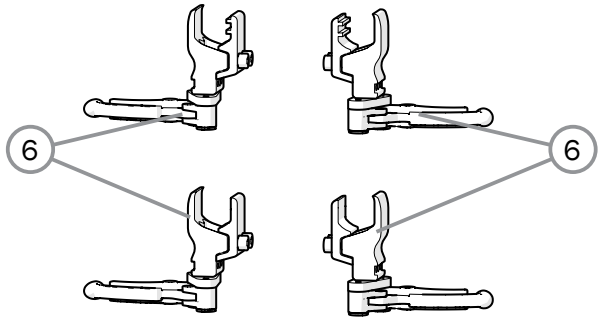

Pos.	Description	Item. No.	Cross 6	Cross 5	Cross 5 XL	Prio	Transit	Xact	Crissy Active	Crissy Sw-Aw.
1	Cir clip RSM 6 stainless	13036					✓			
2	Plate user brakes	80914					✓			
	Plate user brakes	80915					✓			
3	Brake arm user brakes	80919					✓			
4	Brake handle black	50188					✓			
1-4	User brake Transit 16 compl set right	25970-1					✓			
	User brake Transit 16 compl set left	25970-2					✓			
5	Single hand brake Cross/Prio mod 3 35-60 (14-24) right hand compl	27531-1	✓	✓	✓	✓				
	Single hand brake Cross/Prio mod 3 35-60 (14-24) left hand compl	27531-2	✓	✓	✓	✓				
	One hand brake R Xact	28918-1						✓		
	One hand brake L Xact	28918-2						✓		
	Single hand brake M100/Crissy right	28456-1							✓	✓
	Single hand brake M100/Crissy left	28456-2							✓	✓
6	Scissor brake R cpl	28915-1						✓		
	Scissor brake L cpl	28915-2						✓		
	Brake Scissor right compl	28768-1							✓	✓
	Brake Scissor left compl	28768-2							✓	✓

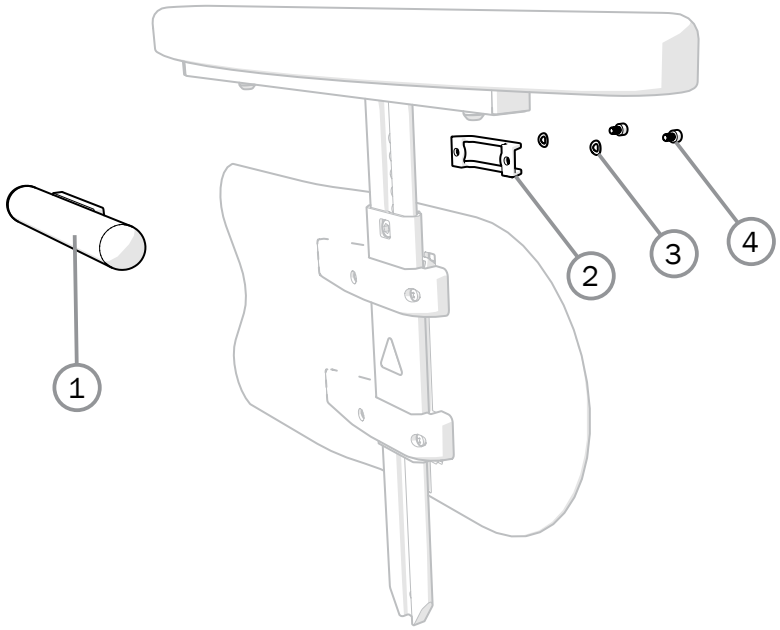

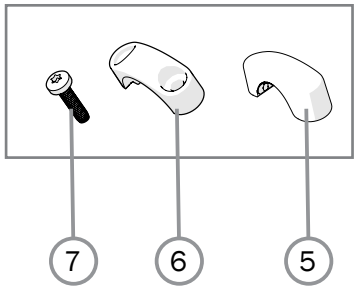

Pos.	Description	Item. No.	Cross 6	Cross 5	Cross 5 XL	Prio	Transit	Xact	Crissy Active	Crissy Sw-Aw.
1	Bracket user tilt					✓				
2	Attachment plate arm support					✓				
3	Washer 5.3x10x0.5					✓				
4	Screw m5x8 MC6S					✓				
1-4	User operated self-tilt	28770				✓				
5	Clamp					✓				
6	Clamp wire control					✓				
7	Screw DG 50x20WN1552 A2					✓				
5-7	Clamp self-tilt	28178				✓				

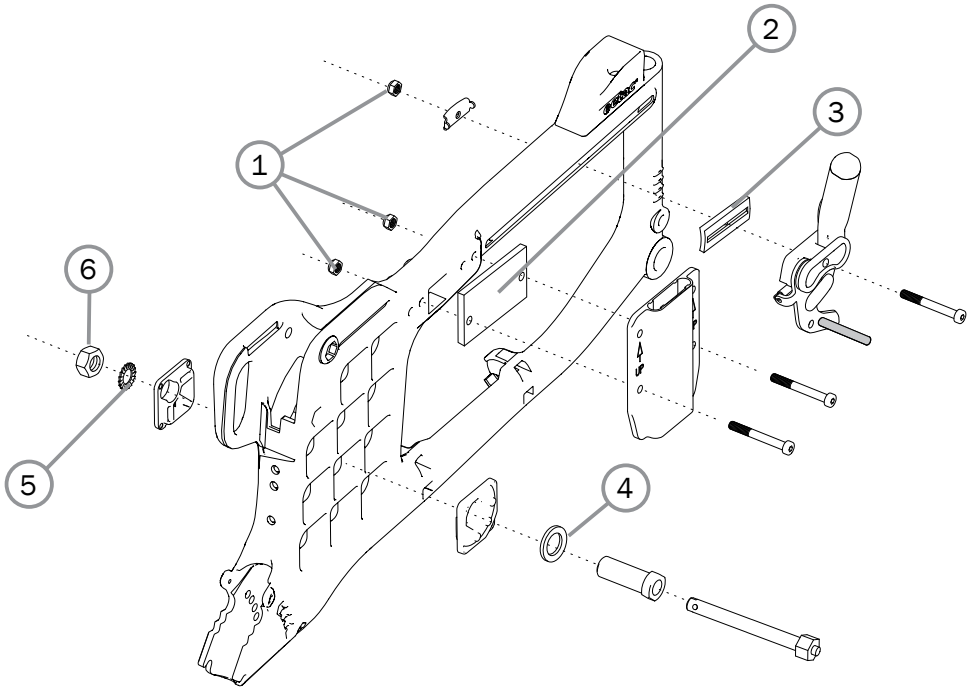

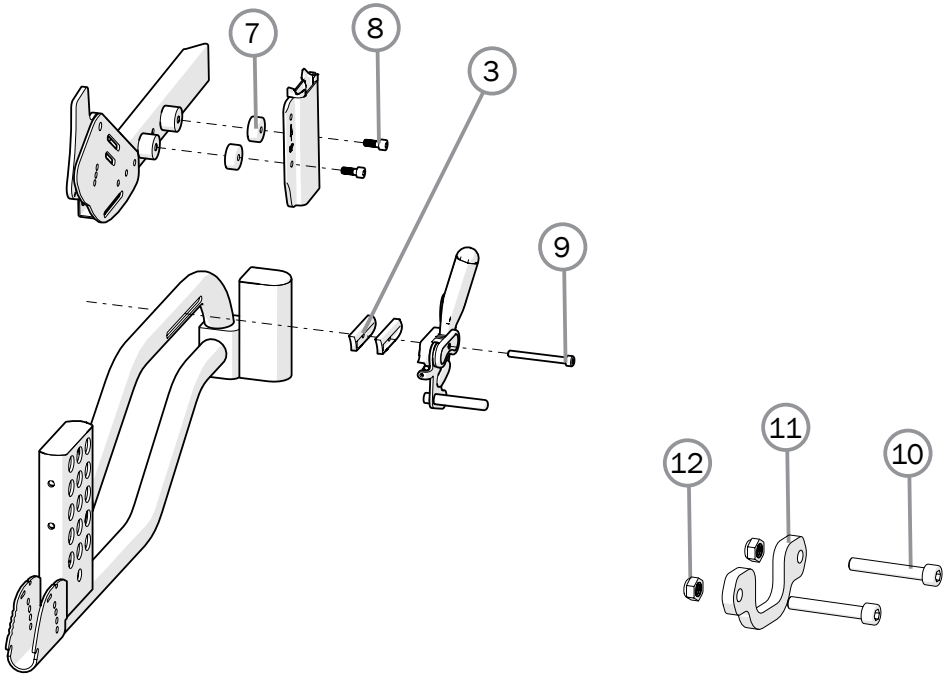

Pos.	Description	Item. No.	Cross 6	Cross 5	Cross 5 XL	Prio	Transit	Xact	Crissy Active	Crissy Sw-Aw.
1	Locking nut M6 black	12035	✓	✓	✓					
2	Spacer seat extension	51018	✓	✓	✓					
3	Adapter brake	51019	✓	✓	✓	✓				
4	Spacer hub	20508	✓	✓	✓					
5	Schnorr washer 17x24x1.3	13084	✓	✓	✓					
6	Nut M16x1	12052	✓	✓	✓					
7	Distance widening kit arm support					✓				
8	Screw M6x75 MC6S 12.9					✓				
9	Screw M6x75 MC6S 12.9					✓				
10	Screw M6x40 MC6S zink plated							✓		
11	Locking nut M6							✓		
12	Widening plate							✓		
1-6	Width expansion kit 10 mm	27533	✓	✓	✓					
3, 7-9	Widening kit 25 mm	27892				✓				
10-12	Widening kit cpl	24079						✓		