1. x:panda size 1, 2, 3 & 4

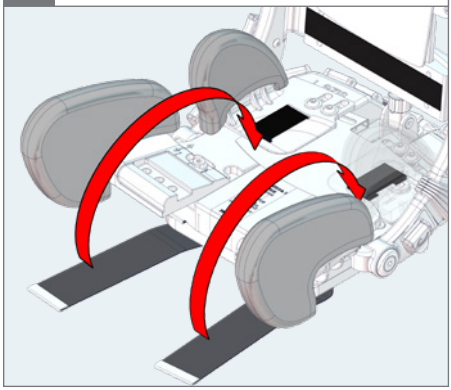

2. x:panda size 1, 2, 3 & 4

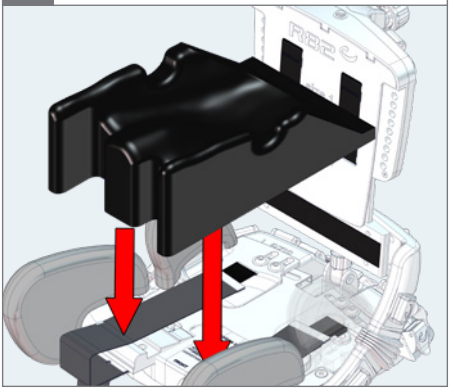

3. x:panda size 1, 2, 3 & 4

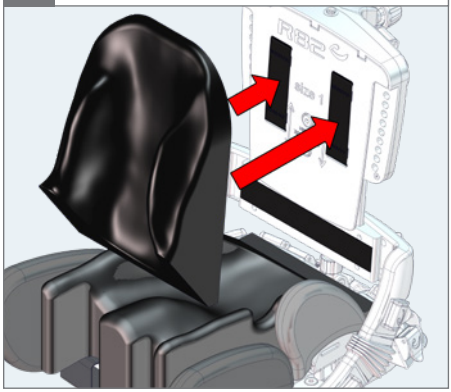

x:panda shape Simple & Advanced seat, size 1, 2 & 3

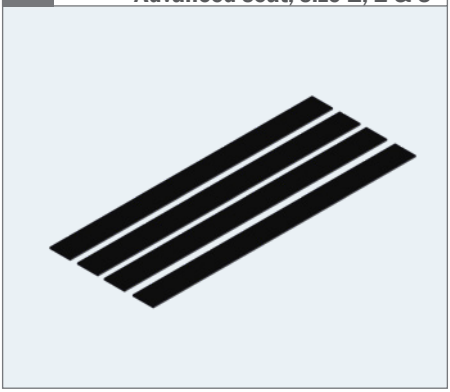

1. x:panda shape Simple seat, size 1, 2 & 3

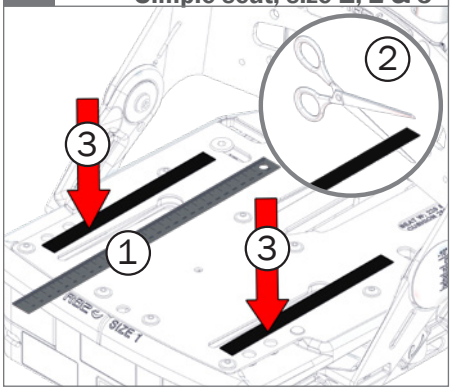

1. x:panda shape Advanced seat, size 1, 2 & 3

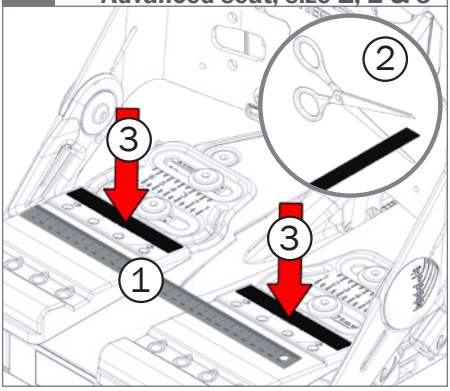

2. x:panda shape Simple & Advanced seat, size 1, 2 & 3

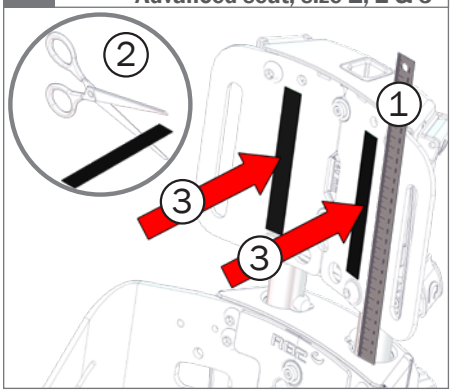

3. x:panda shape Simple seat, size 1, 2 & 3

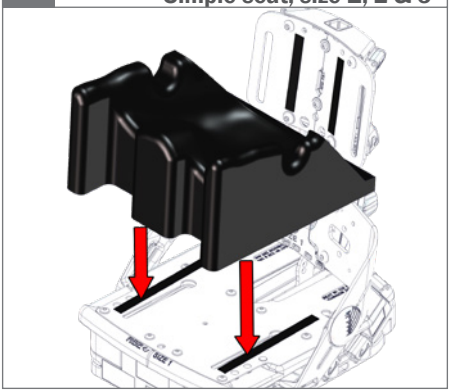

3. x:panda shape Advanced seat, size 1, 2 & 3

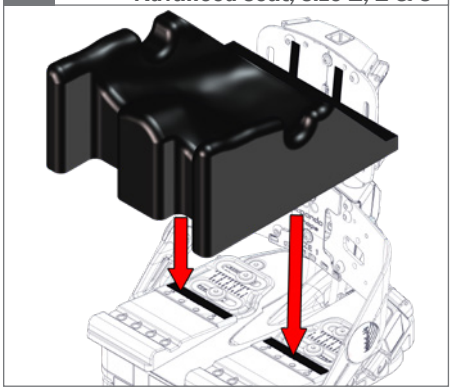
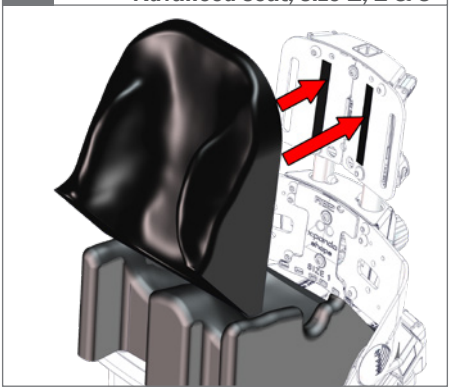
4. x:panda shape Simple & Advanced seat, size 1, 2 & 3