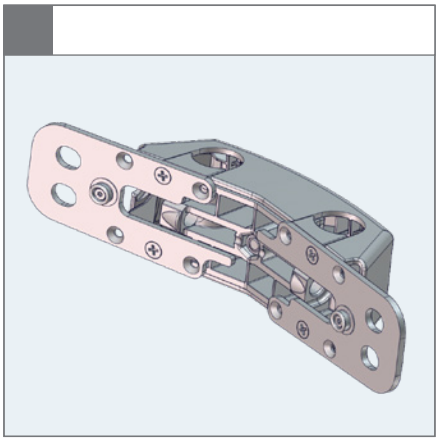

1. ⬡ 5 mm

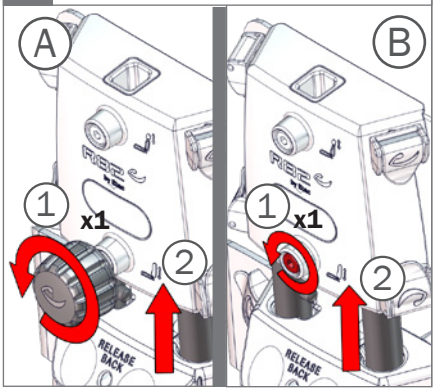

2. ⬡ 5 mm

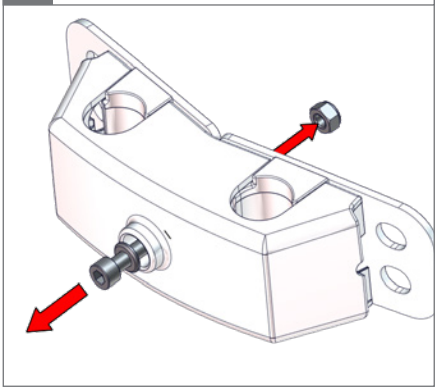

3.

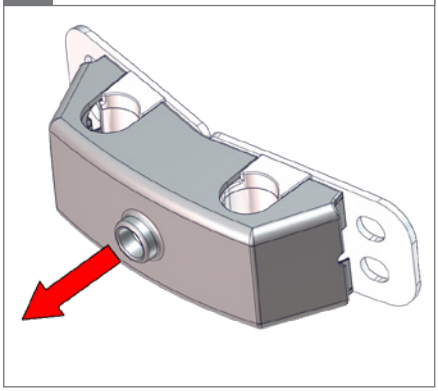

4. ⬡ 5 mm

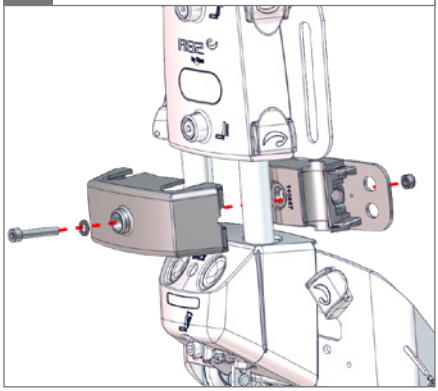

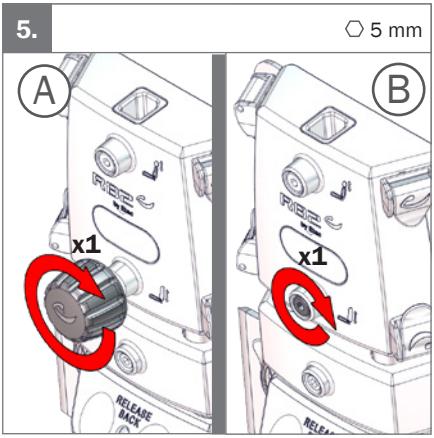
5.
5 mm
A
B
x1
x1
RELEASE BACK