R82® by Etac

1.

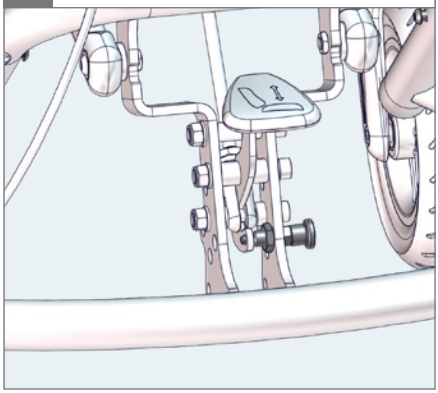

2.

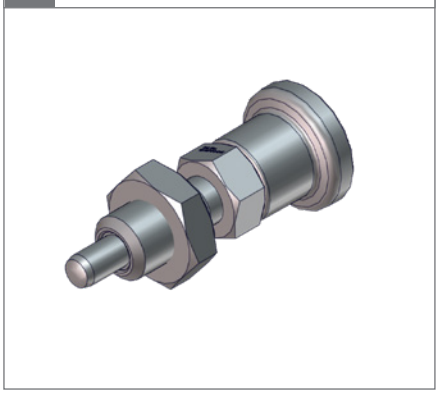

3.

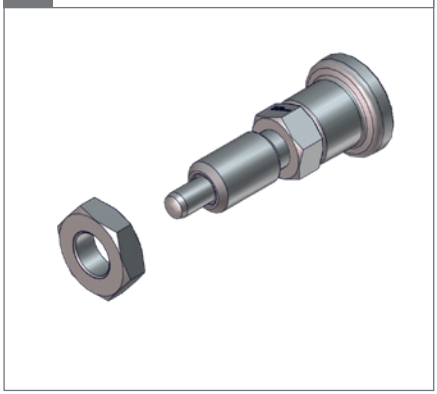

4. 12 + 17 mm

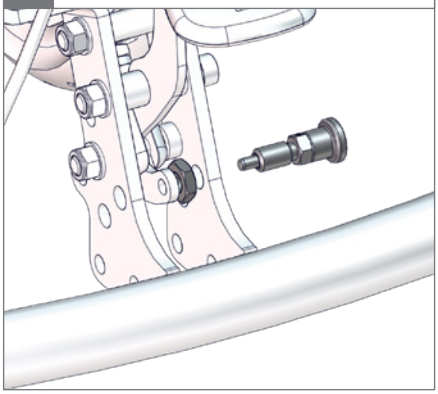

5.

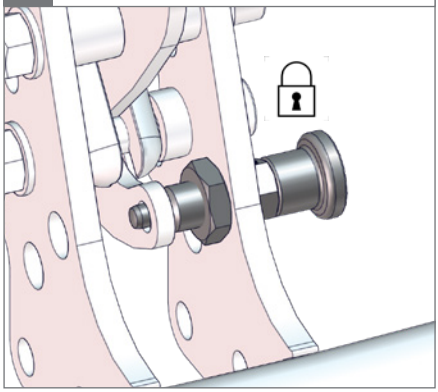
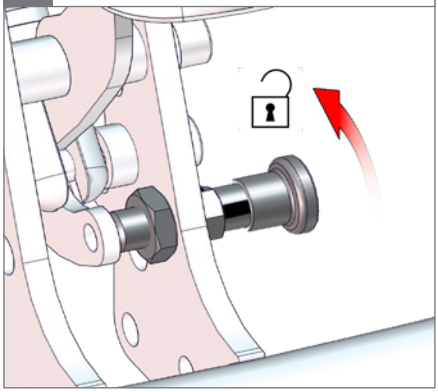
6.