1.

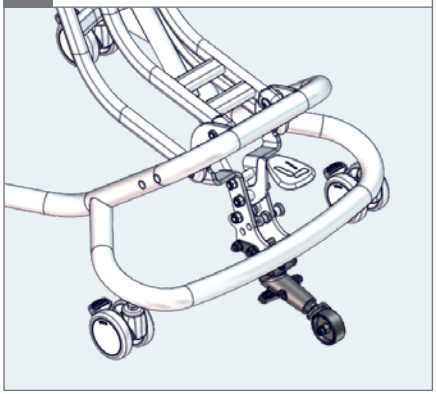

2.

3. 13 mm ⬡ 6 mm

4. 13 mm ⬡ 6 mm

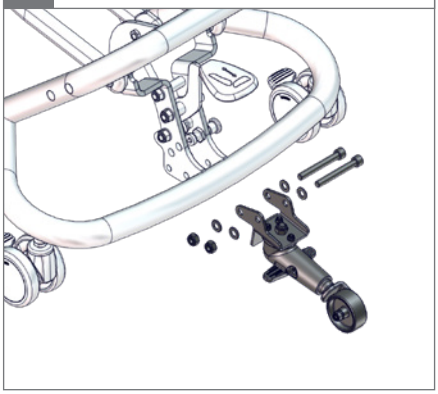

5. 13 mm ⬡ 6 mm

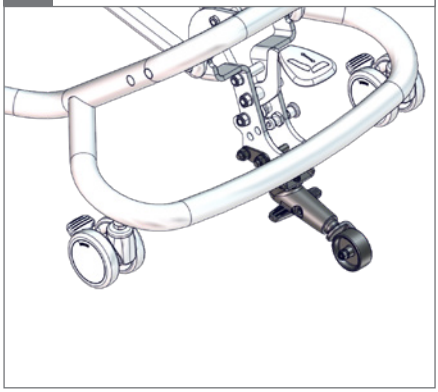
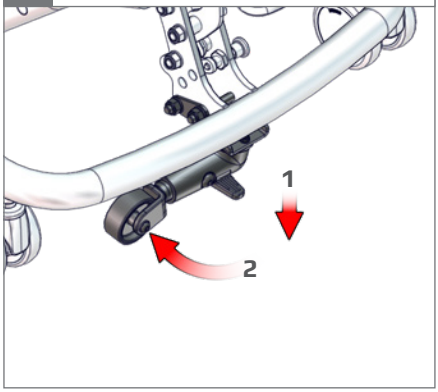
6.