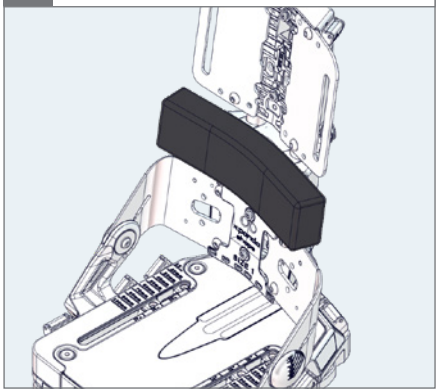

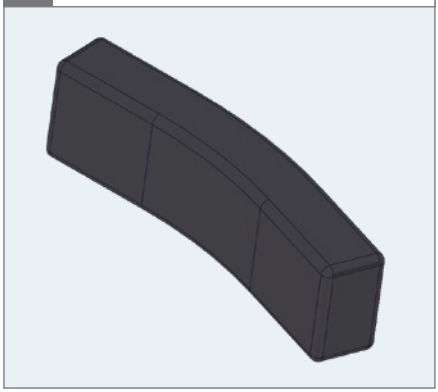

1.

Size 1: ✱ PZ 2
Size 2+3: ⬡ 5 mm

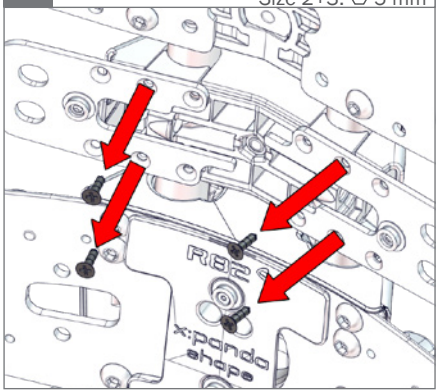

2.

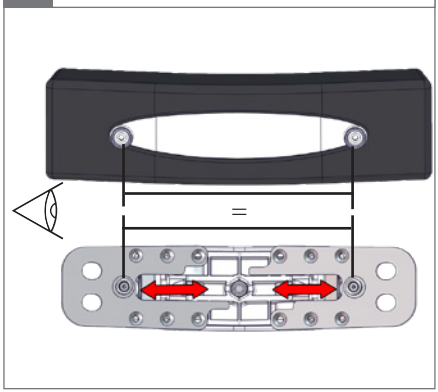

3.

Size 1: ✱ PZ 2
Size 2+3: ⬡ 5 mm

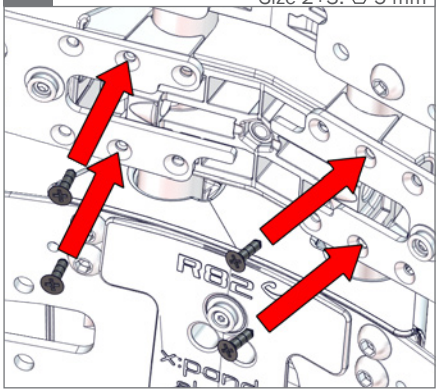

4.

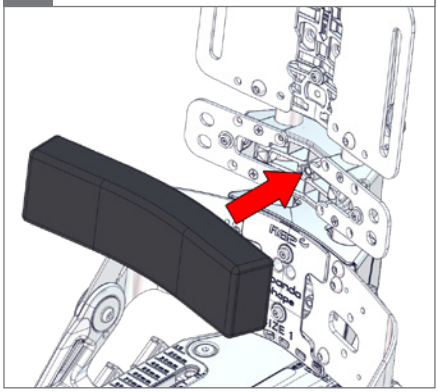

1.

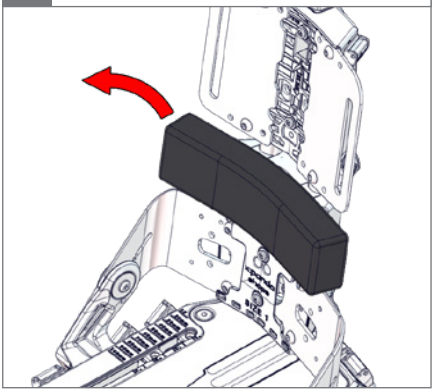

2.

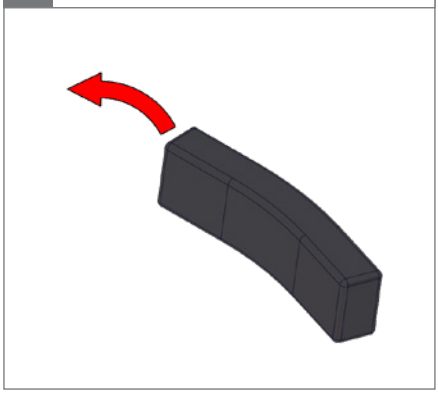

3.

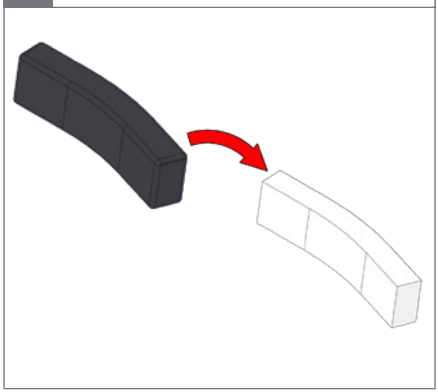
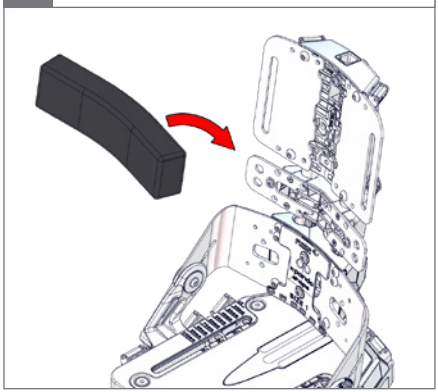
4.