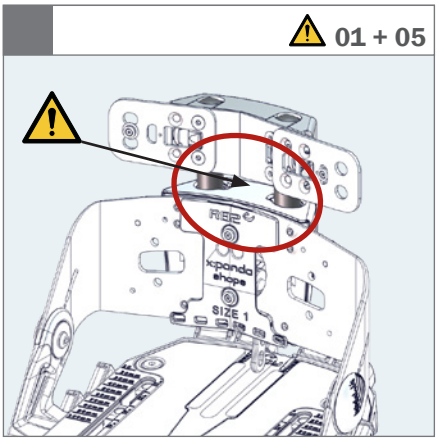
01 + 05
R82
xpanda
shape
SIZE 1

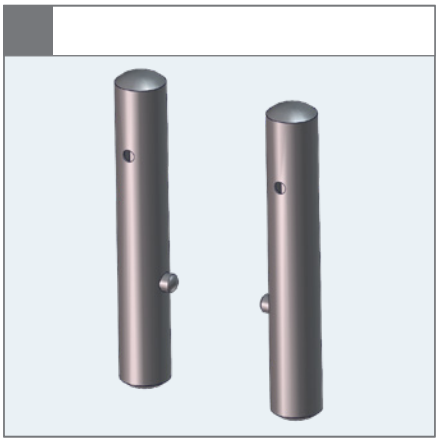

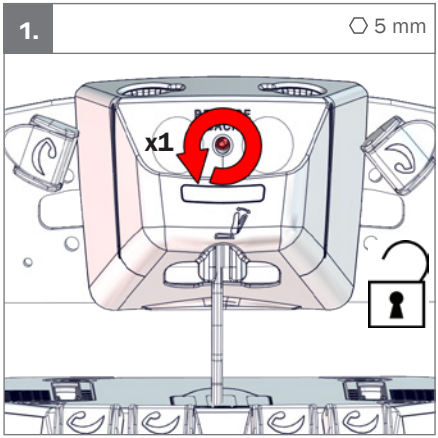
1.
5 mm
x1

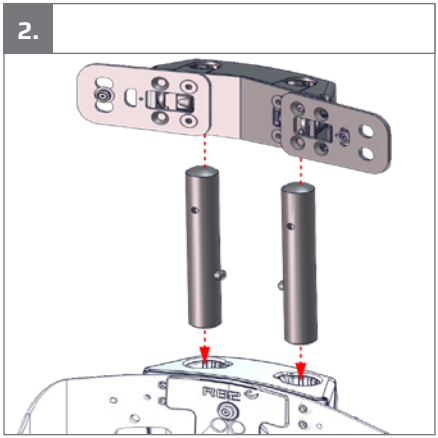
2.
R82

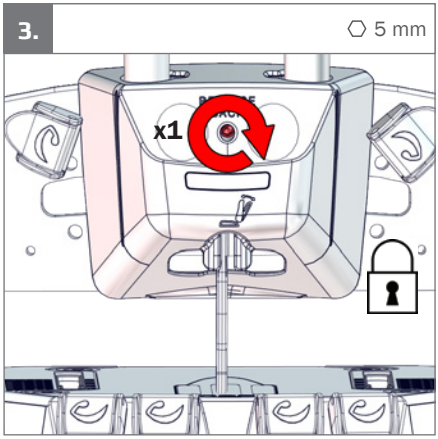
3.
5 mm
x1