REF 24082

# Monteringssats enarmsdrift QR
# Assembly kit one arm drive QR
# Montagesatz Einhandantrieb QR

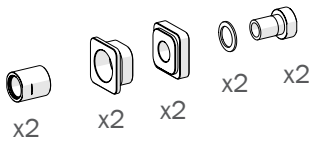


1a21346.2 2026-11-16

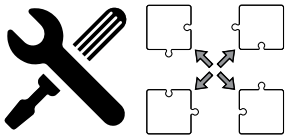

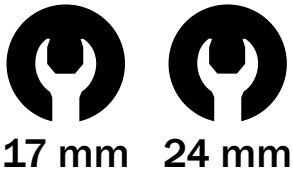


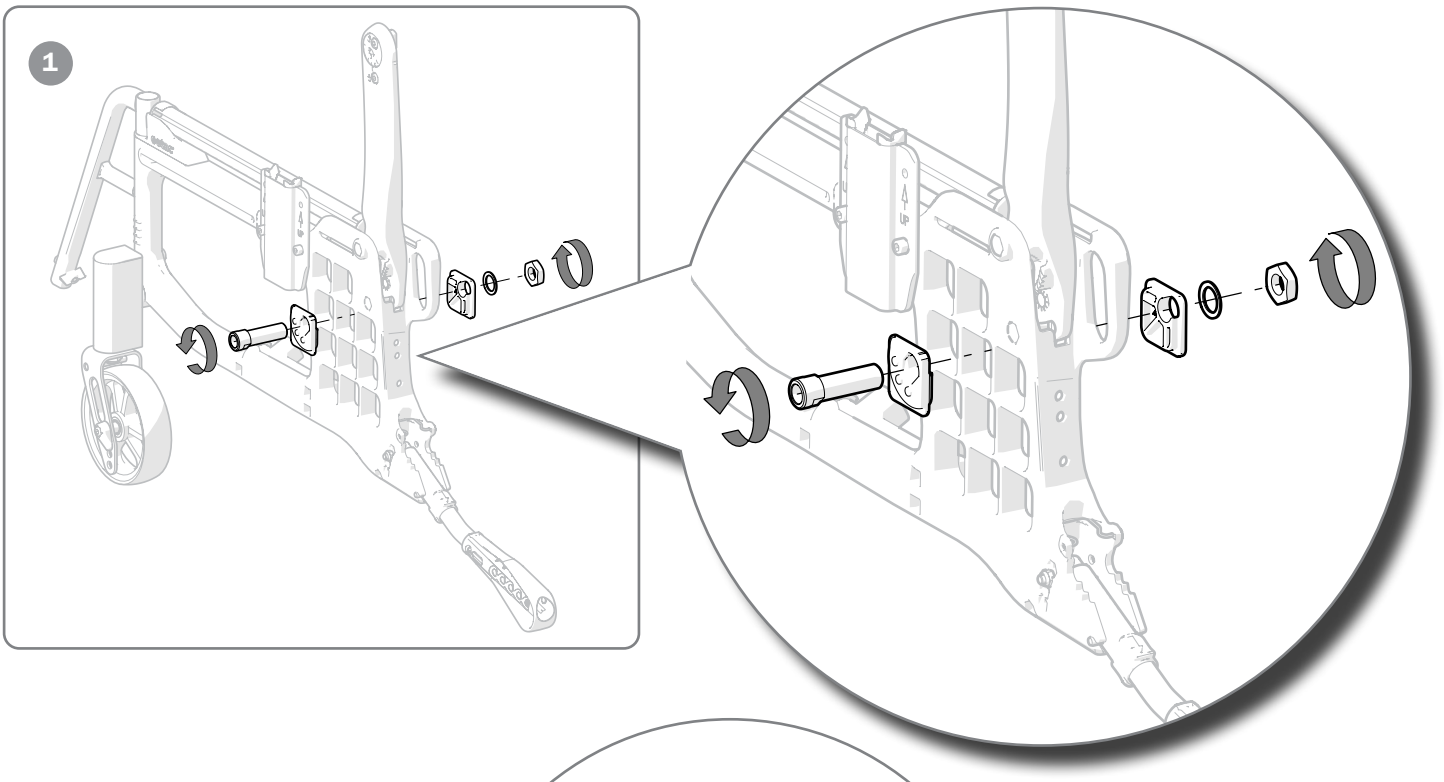




Etac Supply Center AB
Långgatan 12
SE-334 33 Anderstorp
www.etac.com

CE MD

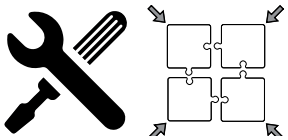




25 mm

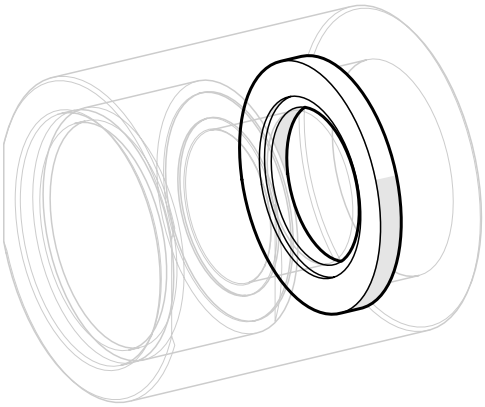

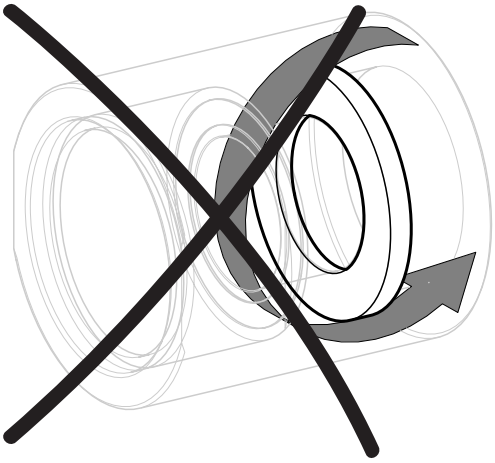

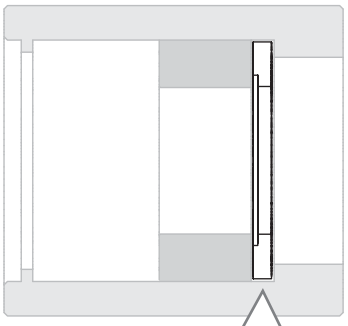

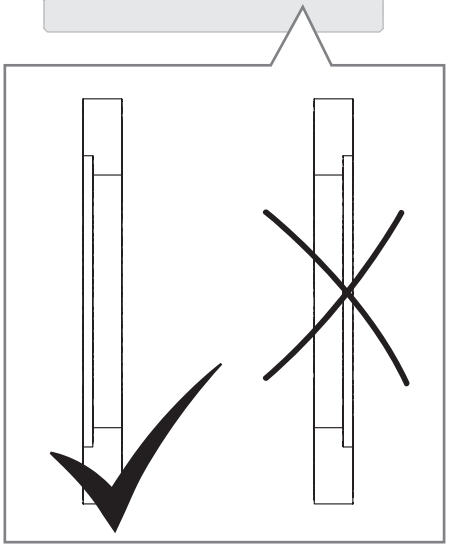

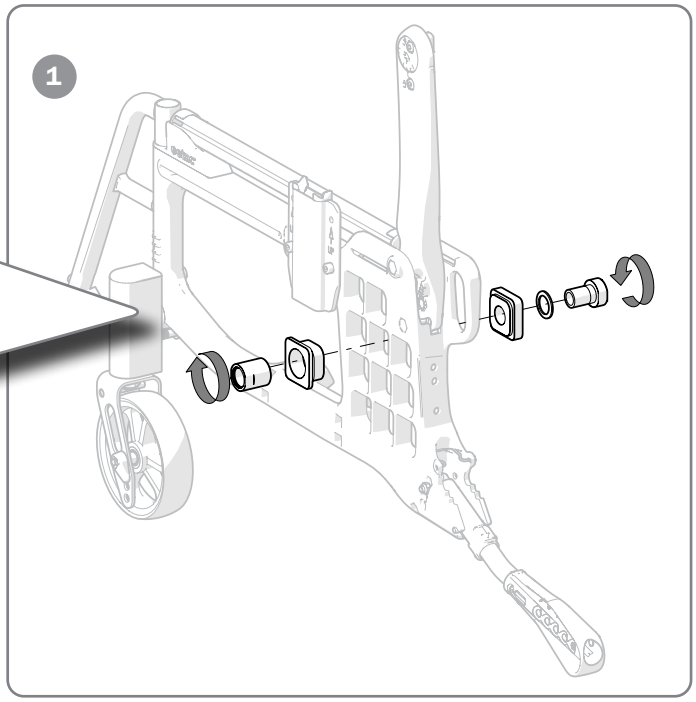


## Cross 6

**Rear seat height table**

| | Rear wheel | Seat height cm | Distance cm seat-rear wheel |
|---|---|---|---|
| Position A Position B | 20" | 45 | 5.5 |
| | 22" | 47.5 | 8 |
| | 24" | 50 | 10.5 |
| Position C Position D | 20" | 41 | 9.5 |
| | 22" | 43.5 | 12.0 |
| | 24" | 46 | 14.5 |
| Position E Position F | 20" | 37 | 13.5 |
| | 22" | 39.5 | 16 |
| | 24" | 42 | 18.5 |
| Position G Position H | 20" | 33 | 17.5 |
| | 22" | 35.5 | 20 |
| | 24" | 38 | 22.5 |

## Cross 5XL

**Rear seat height table**

| | Rear wheel | Seat height cm | Distance cm seat-rear wheel |
|---|---|---|---|
| Position A Position B | 20" | 45 | 5.5 |
| | 22" | 47.5 | 8 |
| | 24" | 50 | 10.5 |
| Position C Position D | 20" | 41 | 9.5 |
| | 22" | 43.5 | 12.0 |
| | 24" | 46 | 14.5 |
| Position E Position F | 20" | 37 | 13.5 |
| | 22" | 39.5 | 16 |
| | 24" | 42 | 18.5 |