R82 by Etac

1.

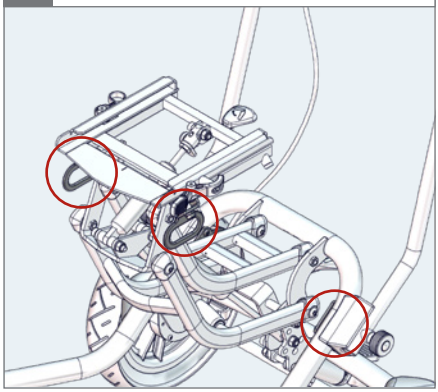

2.

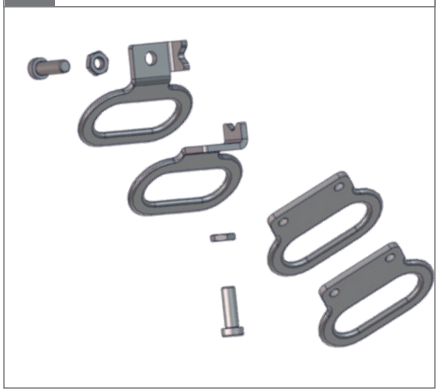

3. ⬡ 5 mm

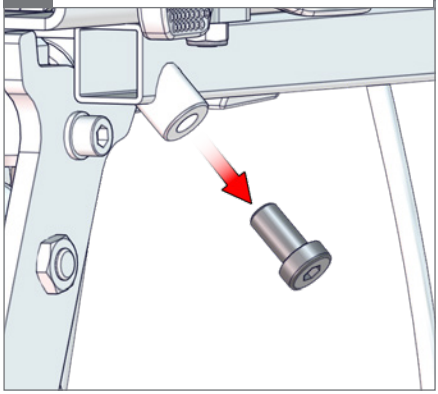

4.

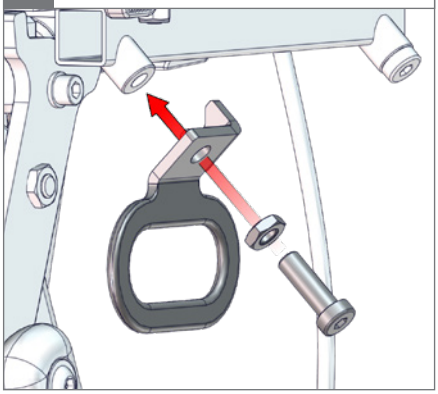

5. ⬡ 5 mm

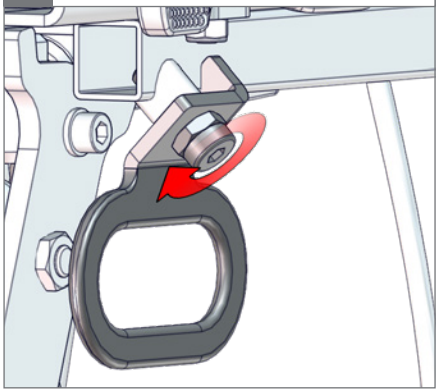

6.

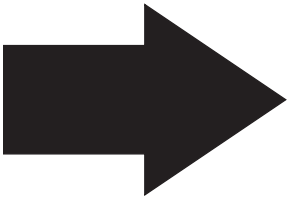

7.

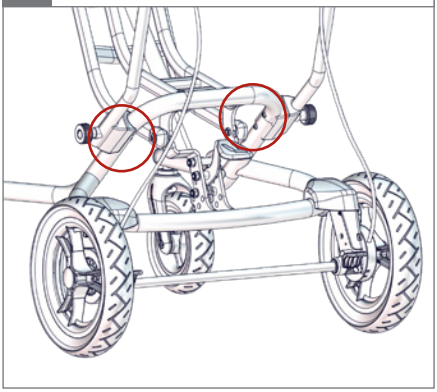

8. ⬡ 4 mm

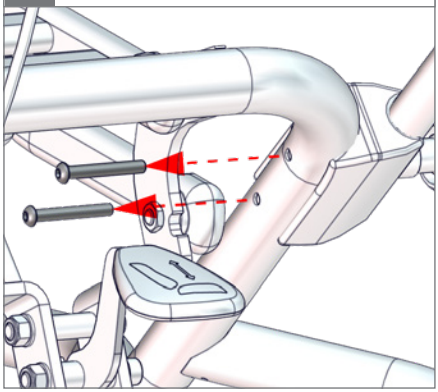

9.

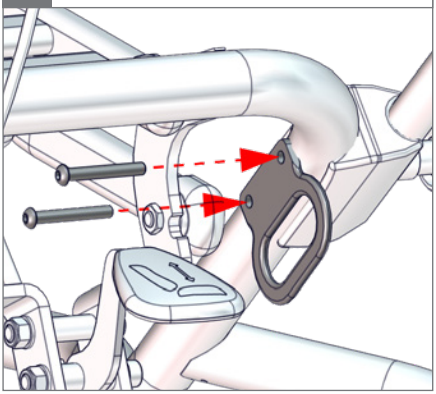

10. ⬡ 4 mm

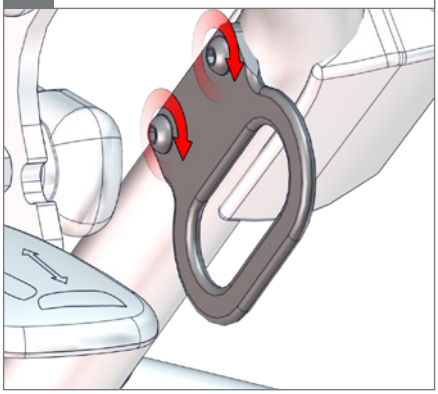

11.