1.

2.

⬡ 8 mm

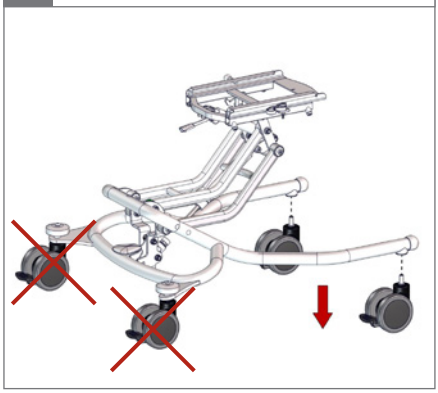

3.

4.

⬡ 8 mm

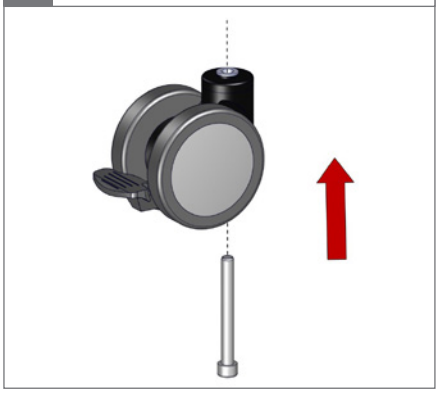

5.

⬡ 8 mm, 35 Nm

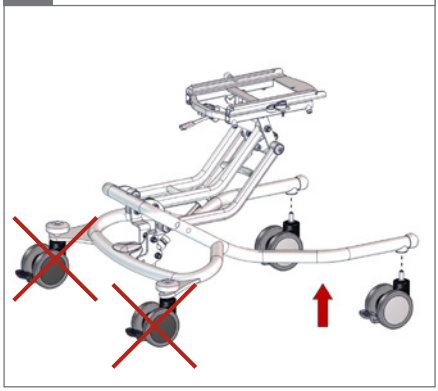
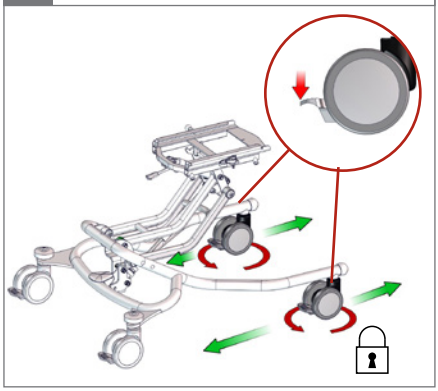
6.