1.

2. ⬡ 5 mm 🔧 13 mm, 2,5 Nm

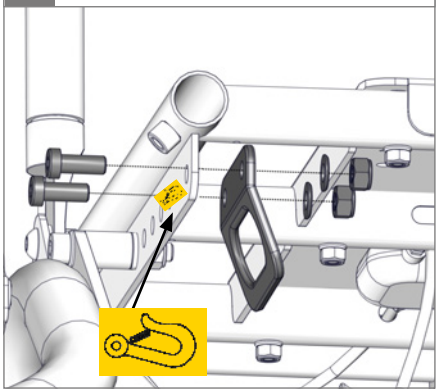

3. ⬡ 5 mm 🔧 13 mm

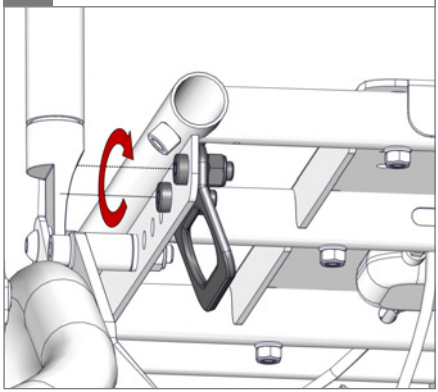

4.

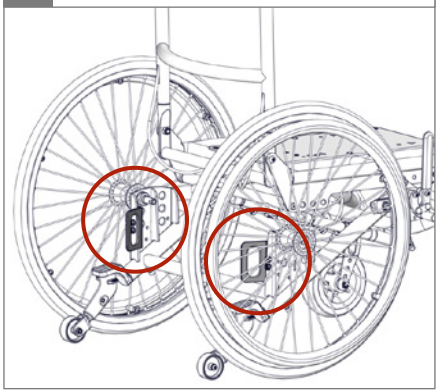

5. ⬡ 4 mm 🔧 10 mm

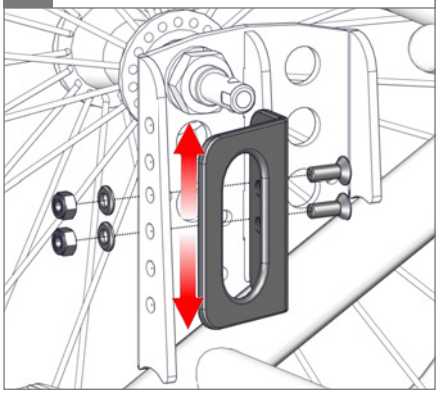
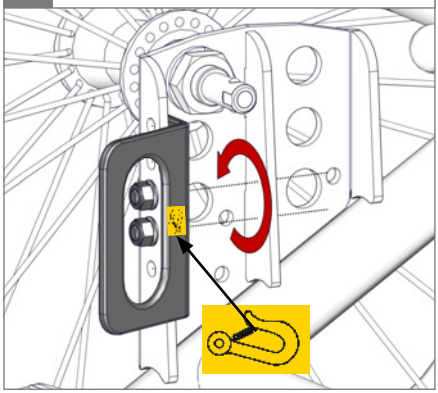
6. ⬡ 4 mm 🔧 10 mm, 2,5 Nm