1. Toucan/Rabbit

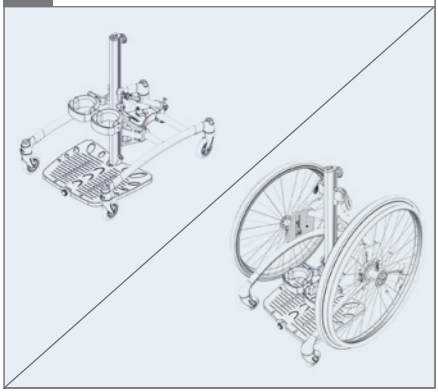

2.

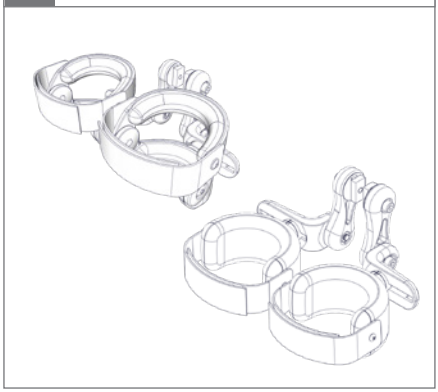

3. ⬡ 5 mm

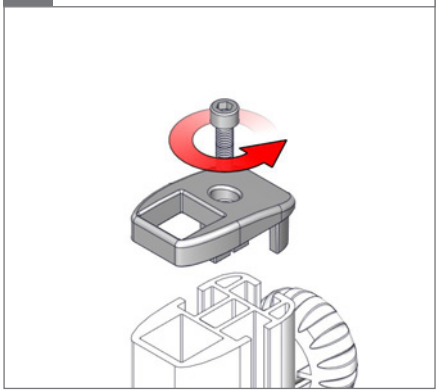

4.

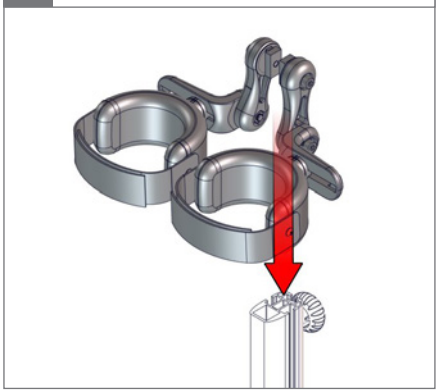

5.

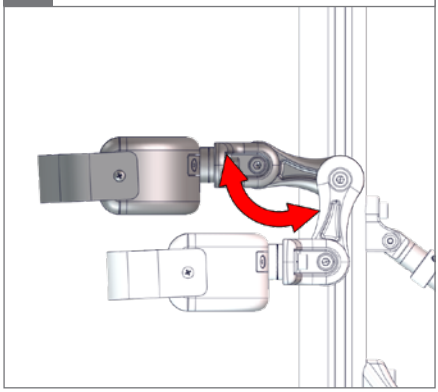

6. ⬡ 6 mm

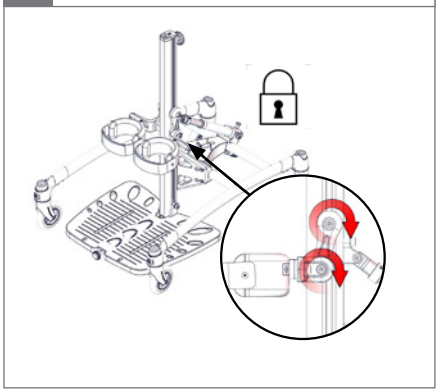

7. ⬡ 6 mm

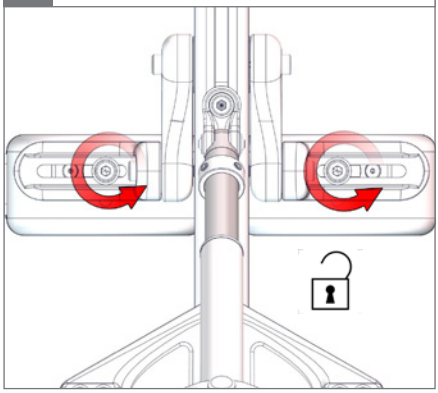

8.

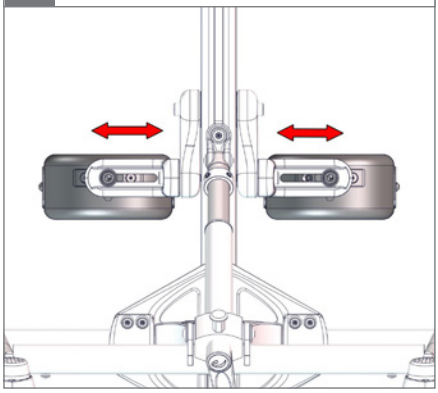

9. ⬡ 6 mm

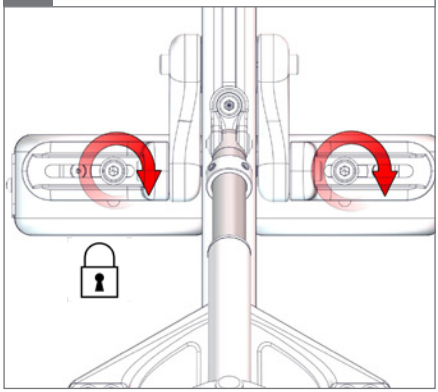
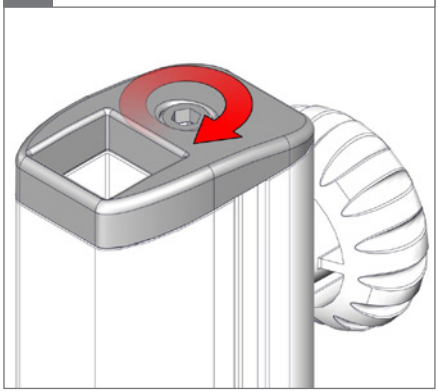
10. ⬡ 5 mm