Molift rail system

Project guide

BM1801 Rev C - 2022.07.13

etac®

Rail systems

Ceiling and wall mounted rail system that support effortless and ergonomic transfers of persons with reduced functional capacity. The rails can be mounted in hospitals, assisted-living facilities, at institutions and private homes.

Single rail systems

This rail system consists of a single rail, or monorail, on which the hoist runs.

The system can be extended with curves at various angles and can include rail switches.

Single rail systems are suited to movement and transfers over longer distances, for example in corridors or for gait training.

Single rail systems can be used in the same transfer situations and spaces as area coverage systems. With single rail systems one must however remember that the planning decision involves a “locked-in” solution, since the wheelchair and bed must be placed directly beneath the rail, since lifting can only be performed beneath the rail layout.

Single rail systems can in some cases be inset, or embedded into ceilings so that only the underside of the rail is visible.

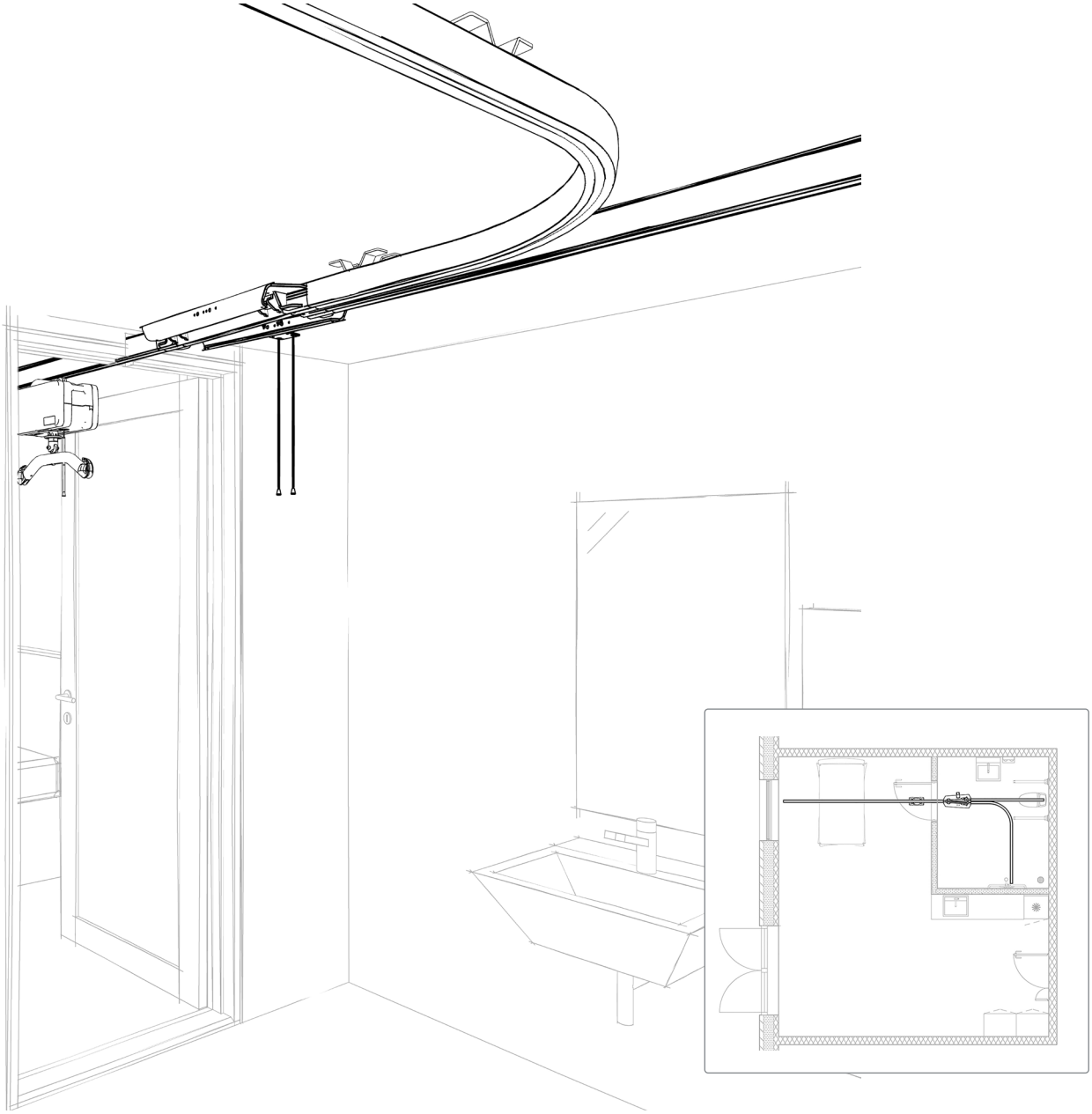

Area covering rail systems

This rail system consists of two primary rails which can be attached to a ceiling, wall or floor. A moving traverse rail runs between the primary rails. The ceiling hoist runs back and forth in the traverse rail.

This system allows extensive freedom in planning the project with respect to room furniture. Beds, wheelchairs and other equipment can be placed at will, without having to take the layout of the rail system into account.

Using rail systems that allow loading anywhere in the rail layout results in the most flexible solution, since the hoist can be loaded at any point within the area covered by the rail system.

The area covering rail system makes it possible to lift the person at any point within the space.

The area covering system is the optimum solution in rooms where considerable lifting is done: lifts become quicker, easier and more comfortable both for the caregiver and the person in care.

In some cases the primary rails can be inset flush with the ceiling so that only the traverse rail is below the ceiling.

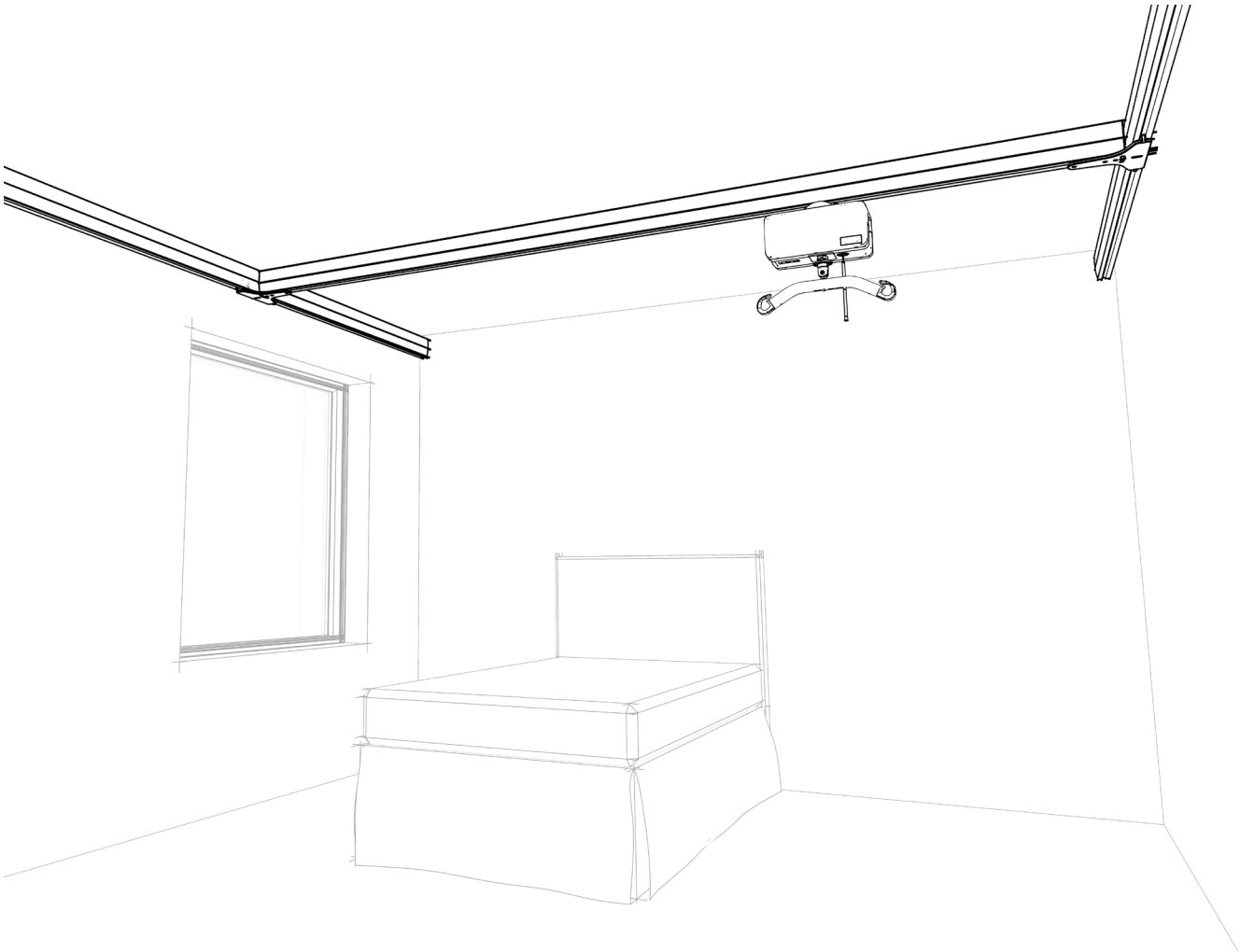

Continuous traverse systems

By installing a single large area covering rail system, two adjoining rooms can be covered (typically a bedroom and bathroom).

This rail system consists of two primary rails which may be attached to a ceiling or wall.

A traverse rail runs between the primary rails and the ceiling hoist travels back and forth in the traverse rail.

This solution involves installing the rail system beyond room divisions. Typically, the traverse rail can be parked close to a room division. Here, an in-built cabinet can be constructed in which the ceiling hoist can also be parked.

This allows the gap in the wall to be closed. When not in use the ceiling hoist is thus hidden in a cabinet, which can also be used to store a sling, for example.

Transfer between the two rooms happens in one gliding and continuous movement and is a single operation, since there is no linking/switching to another system. The rail is continuous from one room to another.

The system allows for freedom when planning the project and furnishing the rooms. The bed, wheelchair, toilet and other furniture can be placed as desired and without reference to the rail system.

The continuous rail system enables transfer of the person in care to and from any place in the room.

It is the optimum solution in rooms where a considerable amount of lifting is done: lifts become quicker, easier and more comfortable for both the caregiver and the person in care.

In some cases the primary rails can be inset flush with the ceiling so that only the traverse rail is below the ceiling.

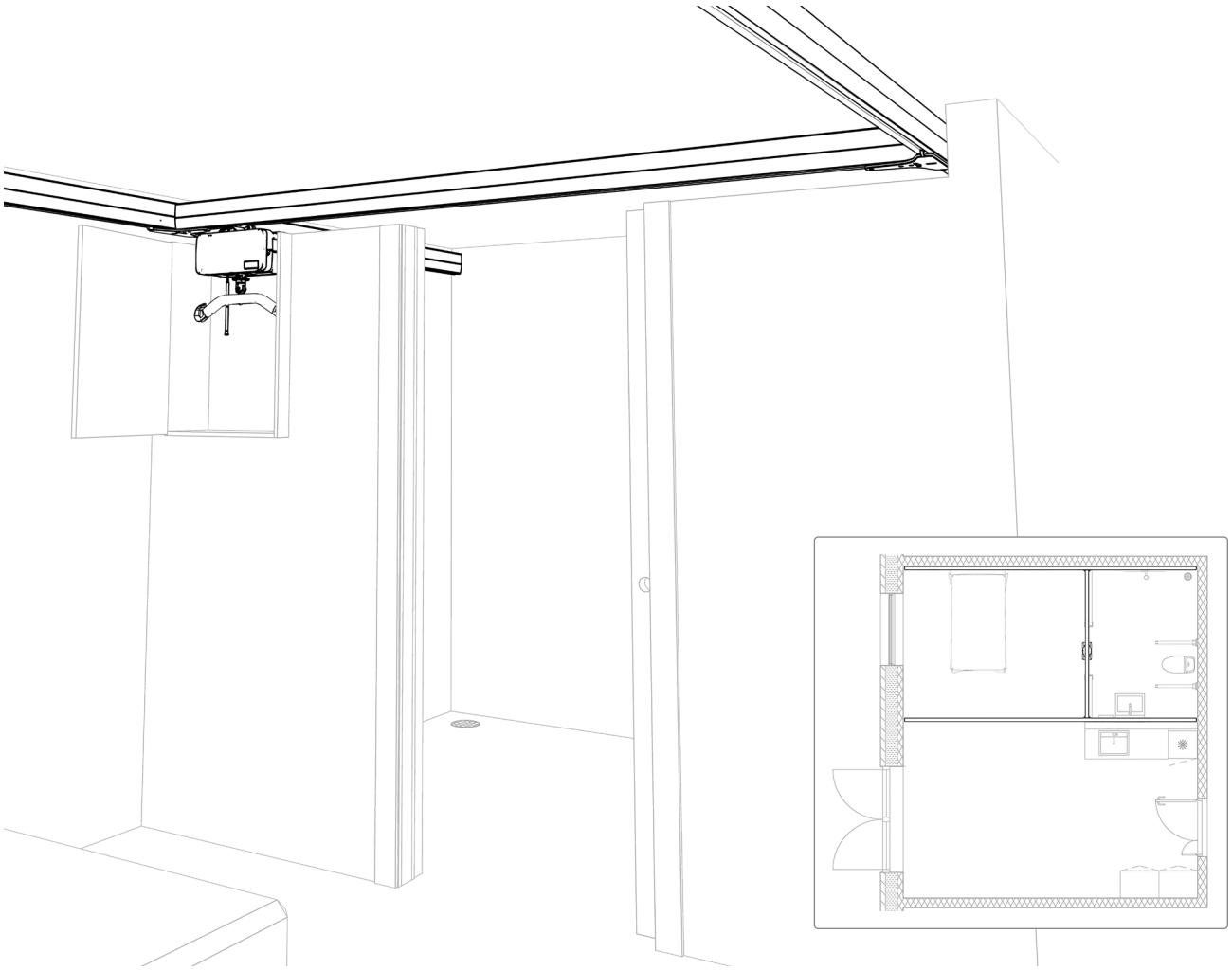

Rail switch systems

Where there is a need to link adjoining rooms, a rail switch can be used to combine two area covering rail systems, or an area covering rail system and a single track system.

The traverse rail must run at right angles to the room where the coupling is required.

A fixed rail will be installed in the doorway between the two rooms. When the driving traverse rail is outside the single rail, the two systems connect automatically. The built-in safety lock opens to allow transfer from room to room.

Disconnection of the lock is done manually.

The linking of two room-covering rail systems allows for a certain freedom when planning the project, since furniture such as bed, wheelchair, toilet and other equipment can be placed relatively freely.

When connecting from an area covering rail system to a single rail, the room furniture in the area with the single rail must be placed to coincide with the route of the track.

In some cases the primary rails can be inset (embedded) flush with the ceiling so that only the traverse rail is below the ceiling. When connecting from an area covering rail system to a single rail, the coupling track and the single rail will be hung below the ceiling.

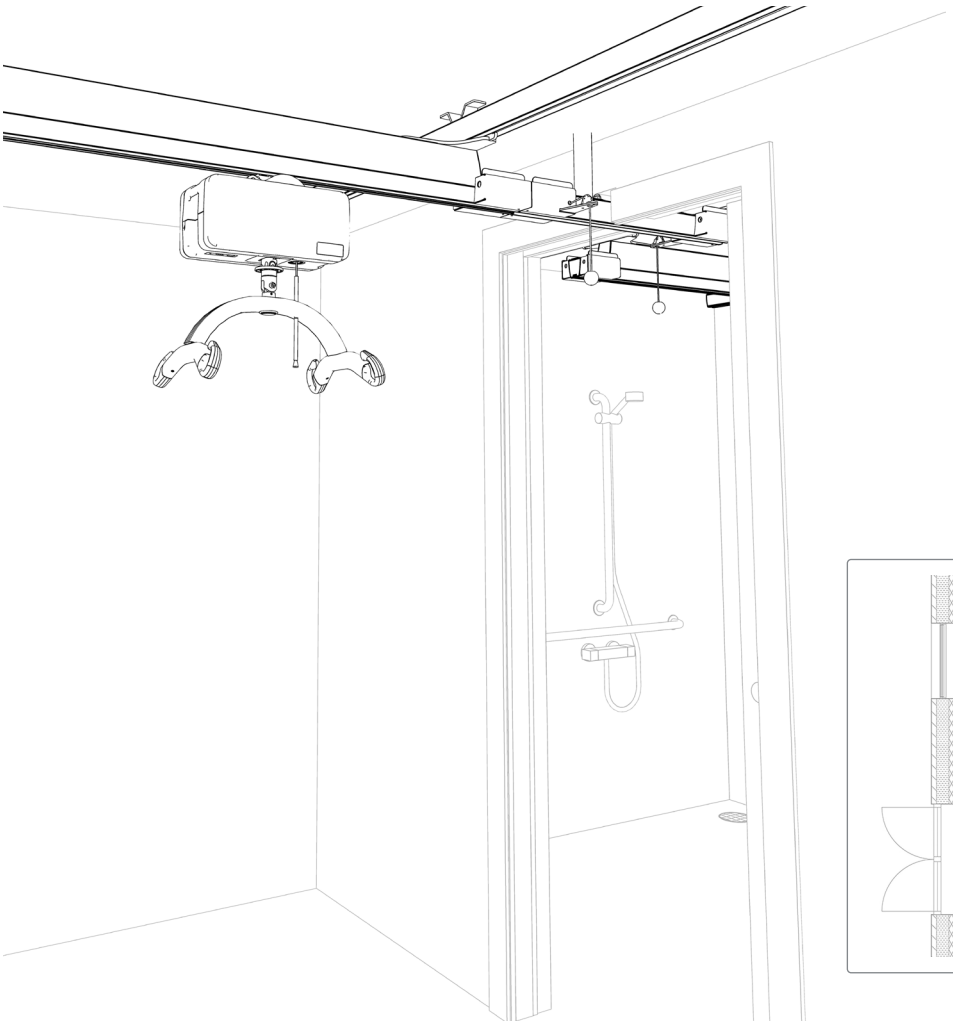

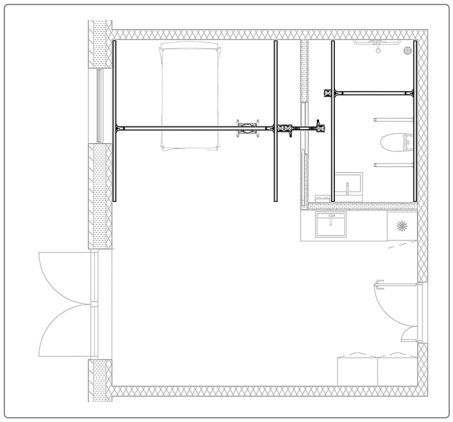

Ceiling hoists

Stationary or mobile, compact ceiling hoists with intuitive operation for a safe and comfortable transfer. Molift's hoists have an outstanding lifting capacity and are optimized for long lifetime and low service costs.

Hoist types

The lifting function on all Molift Air hoists is performed by a battery-driven motor. All hoist types run on a rail system with a 'smart quick release' function which makes it very easy to engage/disengage the hoist.

Recharging of Molift Air hoists is either by manual means or by in-rail charging, which is performed automatically across the rail layout.

Molift Nomad hoists can only be charged manually.

All Molift hoists have built-in software as standard (the 'Service Tool'), enabling data gathering on the use of the hoist. The software can provide service alerts and technical trouble-shooting, as well as allow the verification and adjustment of key parameters.

Molift Air 200

Max. hoisting capacity 205 kg

Molift Air 205/300

Max. hoisting capacity 205/300 kg

Molift Air 350 kg

Max. hoisting capacity 350 kg

Molift Air 500

Max. hoisting capacity 500 kg

Molift Nomad

Max. hoisting capacity 160-255 kg

Sling bars

Molift Air hoist types can be used with either 2- or 4-point sling.

Molift hoisting bars are made of aluminium, thereby contributing to the low total weight of the lift. They are light-weight and easily carried and replaced without the need for tools.

Molift 2-point sling bar

Small, Medium, Large.

Molift 4-point sling bar

Small, Medium, Large, X-large.

Projecting

Effective and accurate project input is crucial to create solutions that benefit users, caregivers, builders and facility owners. Molift Rail System meets all the requirements for Universal Design of environments for persons with reduced functional capacity.

Overview form: Maximum span for standard rails

SWL	Pro-file	Type	Max overhang B (m)							Max distance between pedants A (m)																						Delivery length (m)					
			0,05	0,25	0,35	0,40	0,50	0,60	0,70	0,30	0,50	0,60	0,90	1,00	1,20	1,50	1,60	1,75	2,00	2,25	2,75	3,00	3,25	3,50	3,75	4,00	4,25	4,75	5,00	5,25	5,75	6,00	2	3	4	5	6	7
160	62	DC	X												X																			X	X	X	X	
	62	CC/OC				X														X														X	X	X	X	
	112	OC					X																					X						X	X	X	X	
	142	OC							X																							X		X	X	X	X	X
	85	W		X												X																	X	X	X	X	X	
205	62	DC	X										X																					X	X	X	X	
	62	OC/CC				X													X															X	X	X	X	
	112	OC					X																				X							X	X	X	X	
	142	OC							X																							X		X	X	X	X	X
	85	W		X												X																	X	X	X	X	X	
230	62	DC	X									X																						X	X	X	X	
	62	CC/OC				X												X																X	X	X	X	
	112	OC					X																			X								X	X	X	X	
	142	OC						X																								X		X	X	X	X	X
	85	W		X											X																		X	X	X	X	X	
255	62	DC	X							X																								X	X	X	X	
	62	CC/OC			X													X																X	X	X	X	
	112	OC					X																		X									X	X	X	X	
	142	OC						X																							X			X	X	X	X	X
	85	W		X											X																		X	X	X	X	X	
300	62	DC	X							X																								X	X	X	X	
	62	CC/OC			X												X																	X	X	X	X	
	112	OC				X																		X										X	X	X	X	
	142	OC					X																							X				X	X	X	X	X
	85	W		X											X																		X	X	X	X	X	
350	62	CC/OC		X												X																		X	X	X	X	
	112	OC			X																		X											X	X	X	X	
	142	OC				X																						X						X	X	X	X	X
500	62	CC/OC		X											X																			X	X	X	X	
	112	OC			X																X													X	X	X	X	
	142	OC				X																				X								X	X	X	X	X

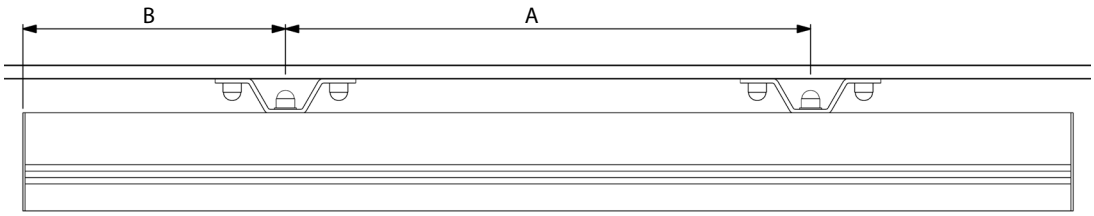

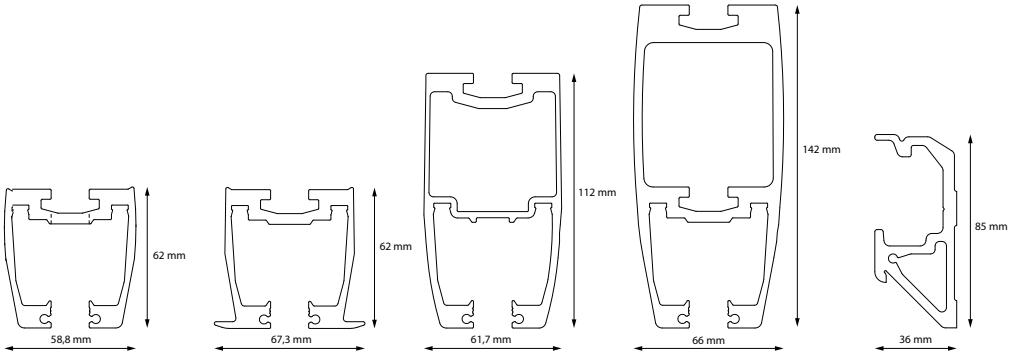

Rail combinations in area covering systems

Standard ceiling fixings

Type 1

- Rail H62 (CC)
- Boxed traverse trolley.

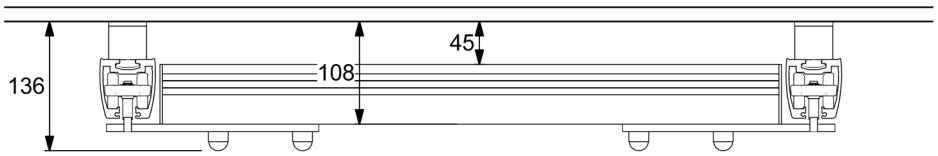

Type 2

- Rail H112 (CC)
- Boxed traverse trolley.

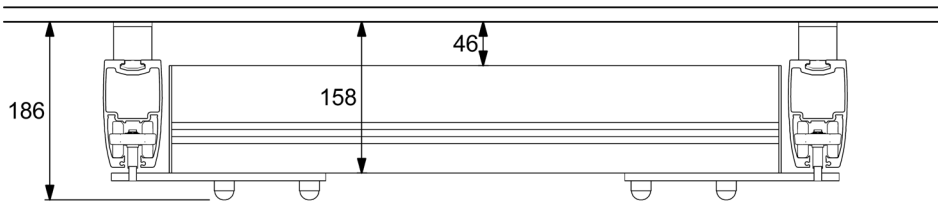

Type 3

- Rail H142 (CC)
- Boxed traverse trolley.

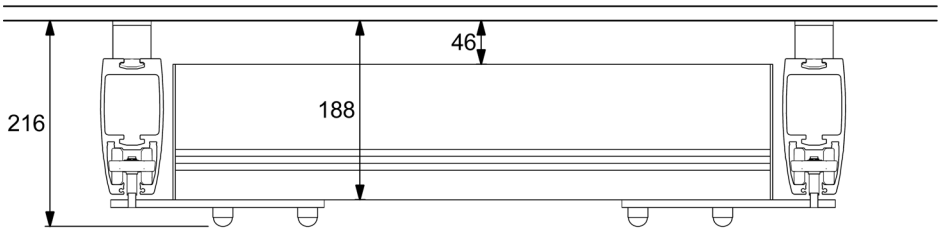

Type 4

- Rail H112 (CC)
- 50 mm traverse trolley.

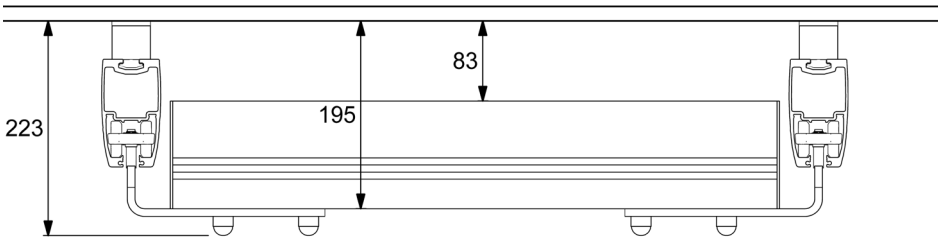

Rail combinations in area covering systems

Standard ceiling fixings – underhung

Type 5

- Rail H62 (CC)
- Underhung rail H62
- Boxed traverse trolley.

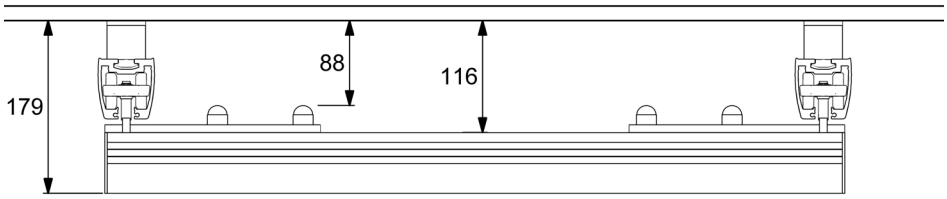

Type 6

- Rail H62 (CC)
- Underhung rail H112
- Boxed traverse trolley.

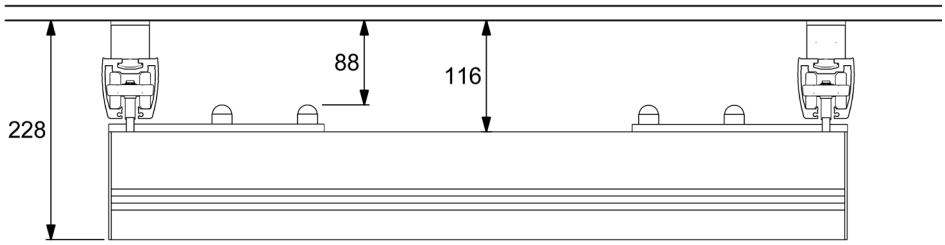

Type 7

- Rail H62 (CC)
- Underhung rail H142
- Boxed traverse trolley.

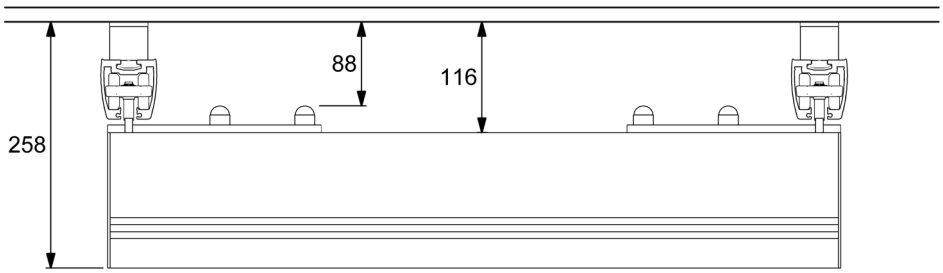

Rail combinations in area covering systems

Standard ceiling fixings – underhung

Type 8

- Rail H62 (CC)
- Underhung rail H62
- 50 mm traverse trolley.

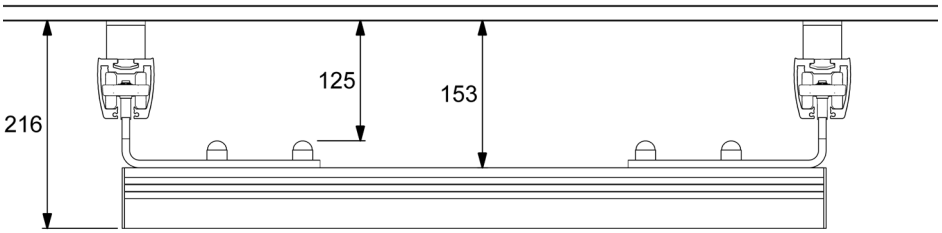

Type 9

- Rail H62 (CC)
- Underhung rail H112
- 50 mm traverse trolley.

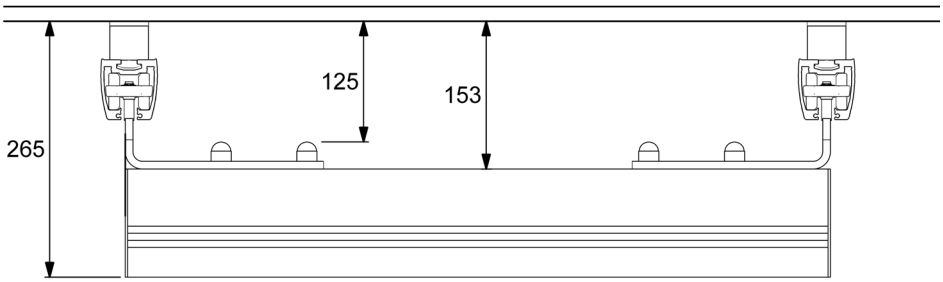

Type 10

- Rail H62 (CC)
- Underhung rail H142
- 50 mm traverse trolley.

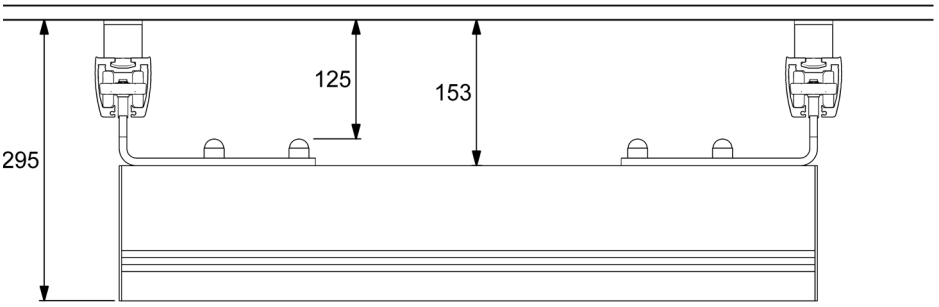

Rail combinations in area covering systems

Standard ceiling fixings – underhung

Type 11

- Rail H62 (CC)
- Underhung rail H62
- + 50 mm extended traverse trolley.

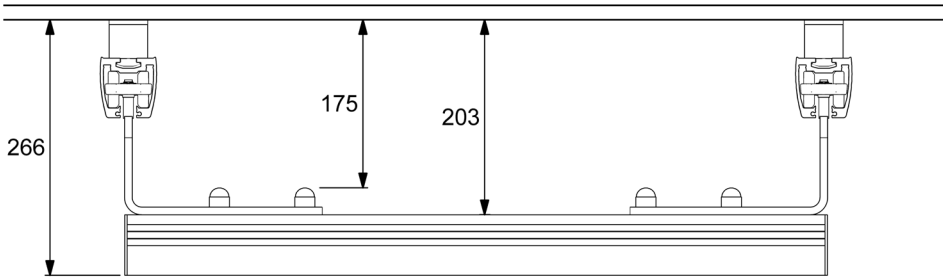

Type 12

- Rail H62 (CC)
- Underhung rail H112
- + 50 mm extended traverse trolley,

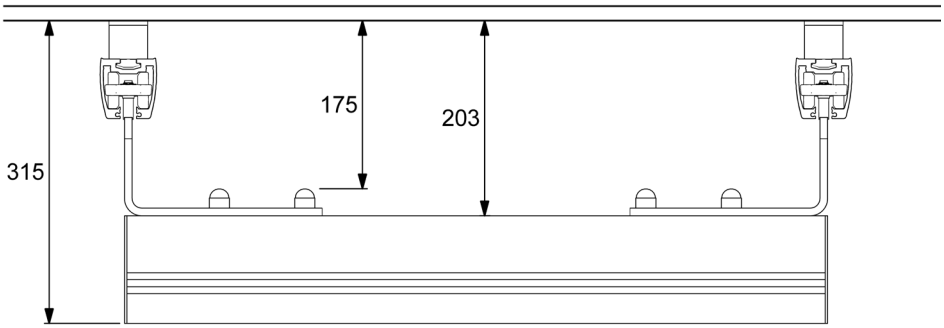

Type 13

- Rail H62 (CC)
- Underhung rail H142
- + 50 mm extended traverse trolley,

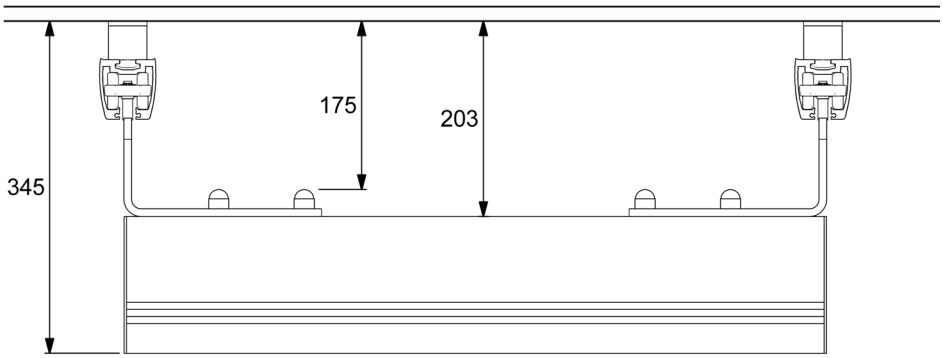

Rail combinations in area covering systems

Standard ceiling fixings – underhung

Type 14

- Rail H112 (CC)
- Underhung rail H112
- Boxed traverse trolley.

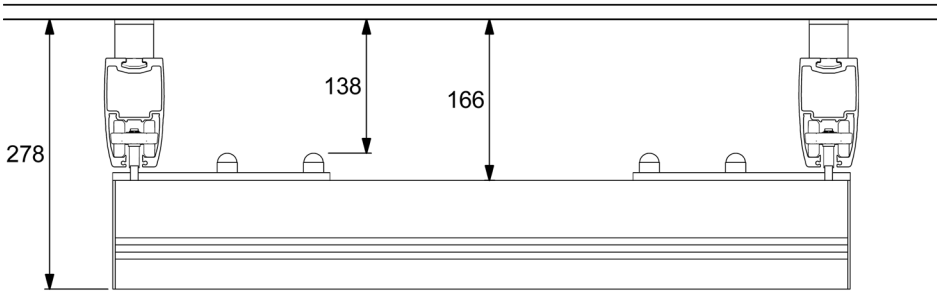

Type 15

- Rail H112 (CC)
- Underhung rail H142
- Boxed traverse trolley.

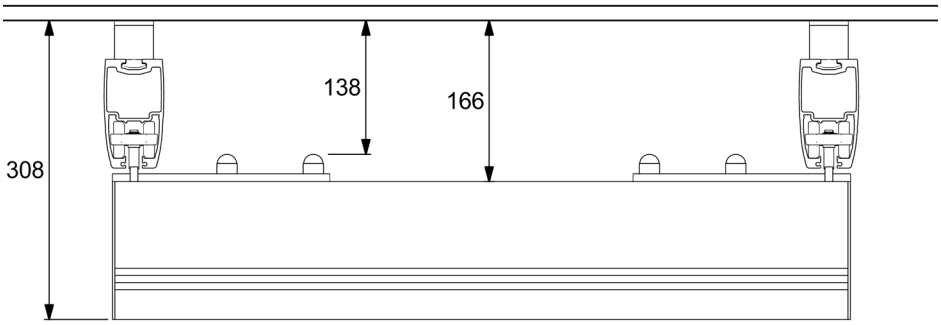

Type 16

- Rail H112 (CC)
- Underhung rail H112
- 50 mm traverse trolley.

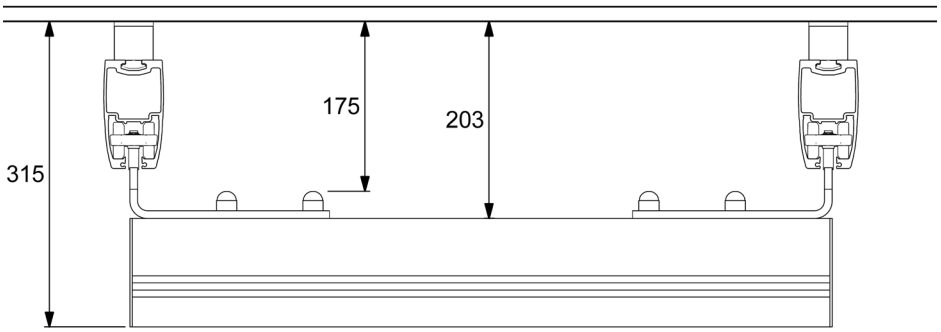

Rail combinations in area covering systems

Standard ceiling fixings – underhung

Type 17

- Rail H112 (CC)
- Underhung rail H142
- 50 mm traverse trolley.

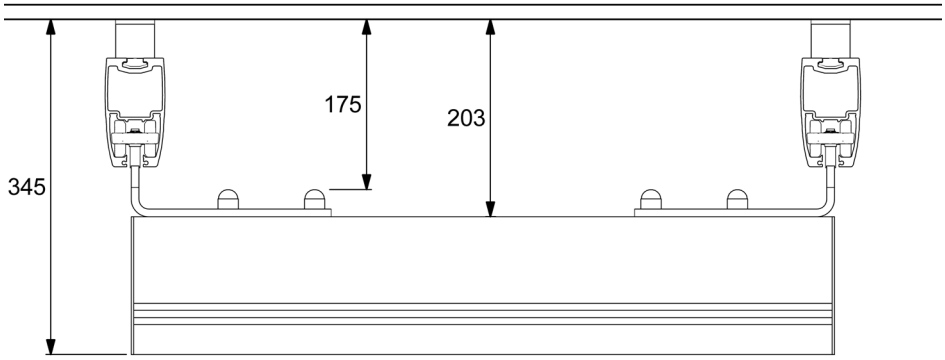

Type 18

- Rail H112 (CC)
- Underhung rail H112
- + 50 mm extended traverse trolley.

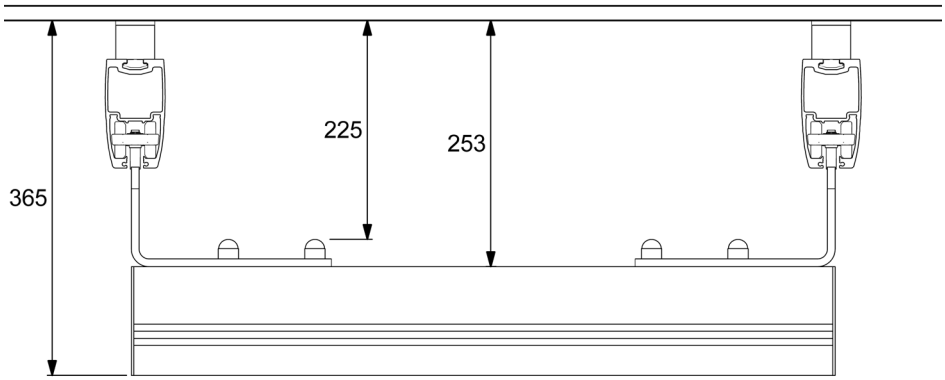

Type 19

- Rail H112 (CC)
- Underhung rail H142
- + 50 mm extended traverse trolley.

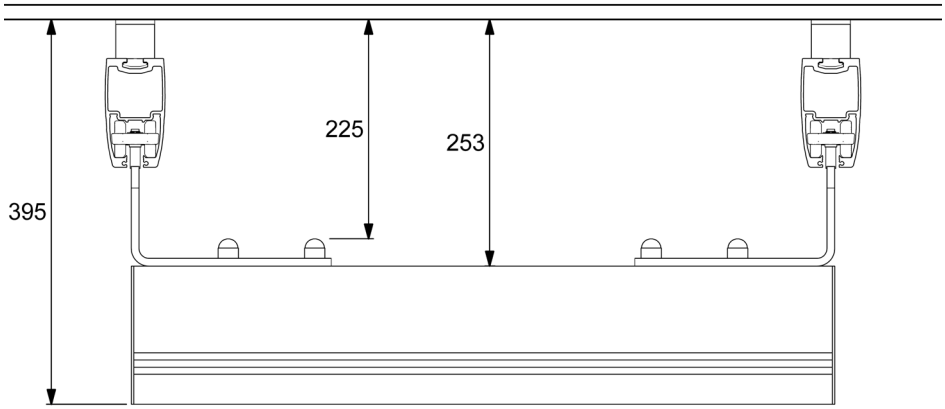

Rail combinations in area covering systems

Standard ceiling fixings – underhung

Type 20

- Rail H142 (CC)
- Underhung rail H112
- Boxed traverse trolley.

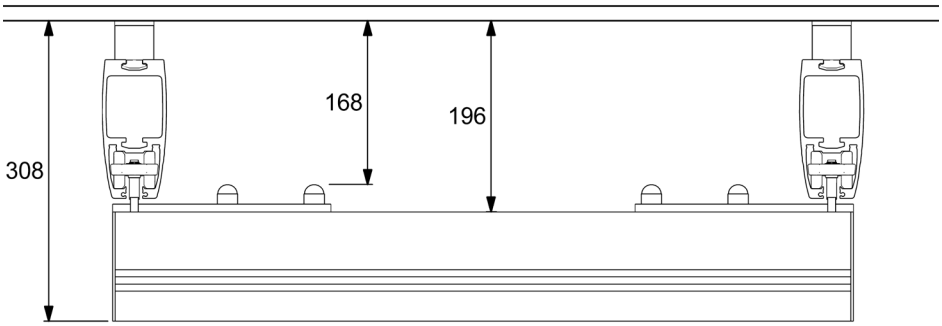

Type 21

- Rail H142 (CC)
- Underhung rail H142
- Boxed traverse trolley.

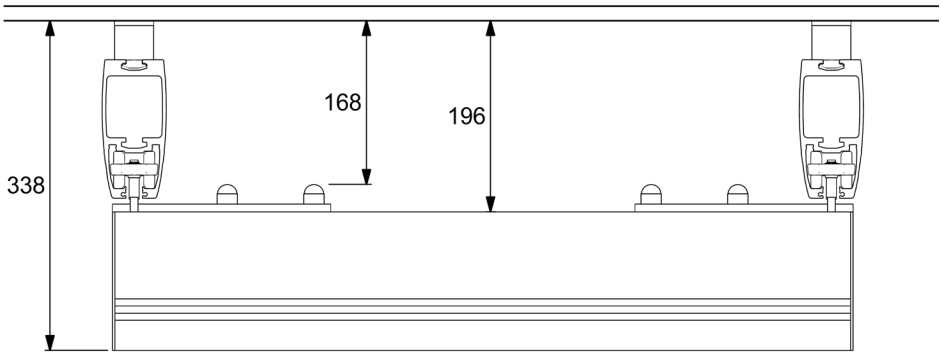

Type 22

- Rail H142 (CC)
- Underhung rail H112
- 50 mm traverse trolley.

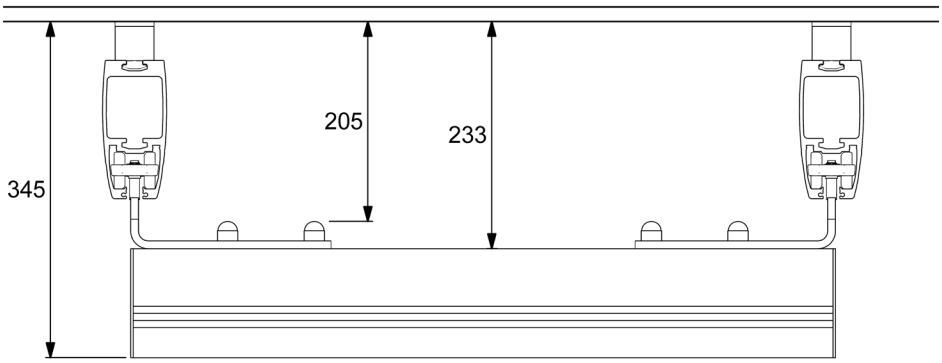

Rail combinations in area covering systems

Standard ceiling fixings – underhung

Type 23

- Rail H142 (CC)
- Underhung rail H142
- 50 mm traverse trolley.

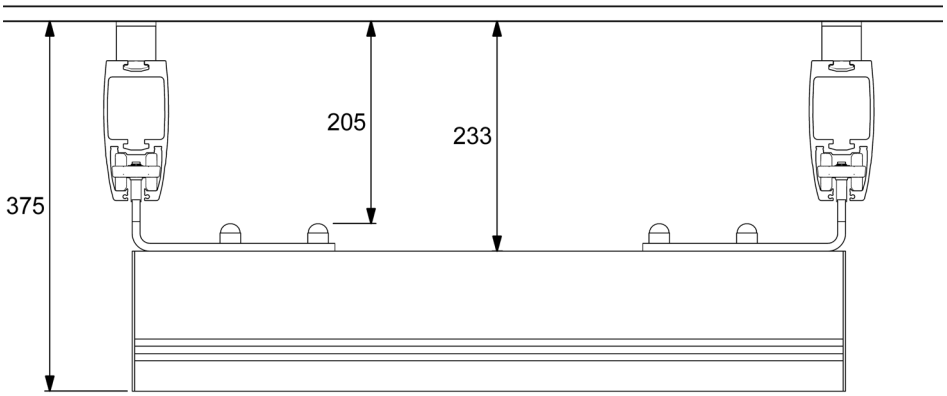

Type 24

- Rail H142 (CC)
- Underhung rail H112
- + 50 mm extended traverse trolley.

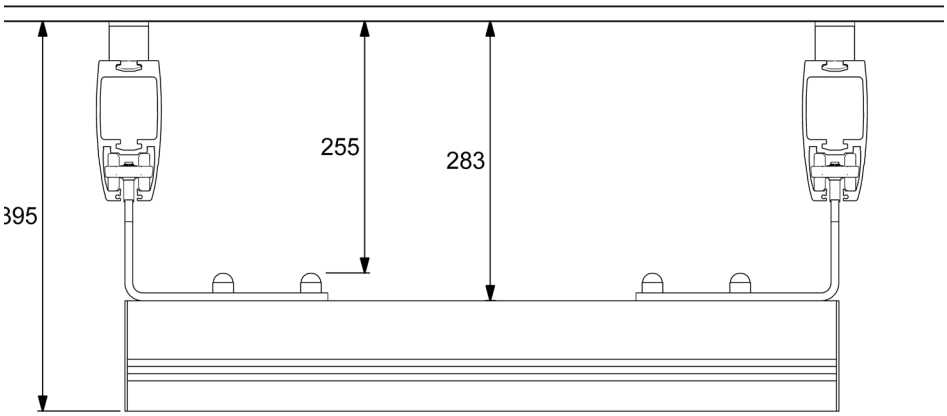

Type 25

- Rail H142 (CC)
- Underhung rail H142
- + 50 mm extended traverse trolley.

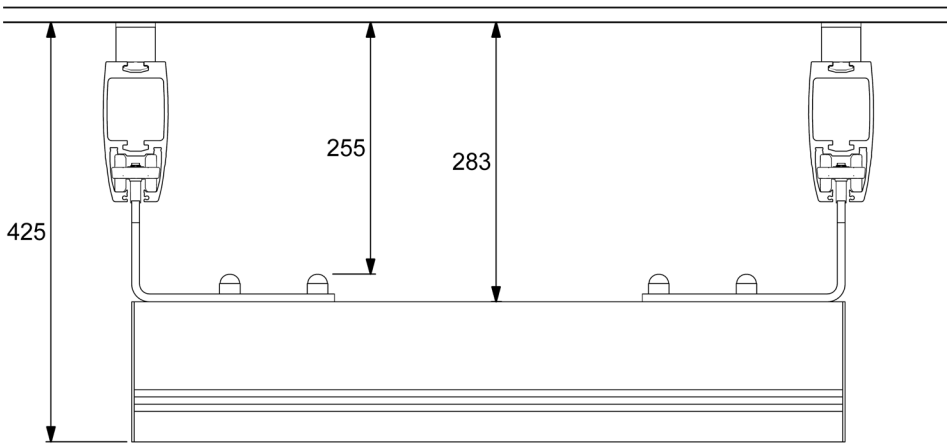

Rail combinations in area covering systems

Standard ceiling fixings – underhung

Type 26

- Rail H62 (CC)
- Underhung rail H62
- Boxed traverse trolley.

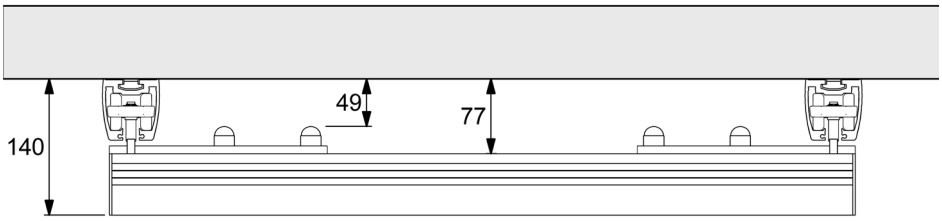

Type 27

- Rail H62 (CC)
- Underhung rail H112
- Boxed traverse trolley.

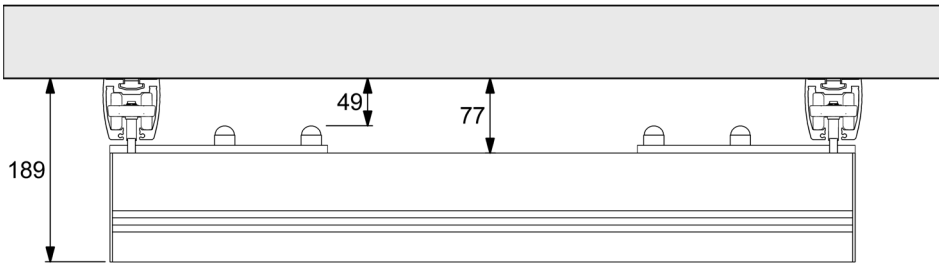

Type 28

- Rail H62 (CC)
- Underhung rail H142
- Boxed traverse trolley.

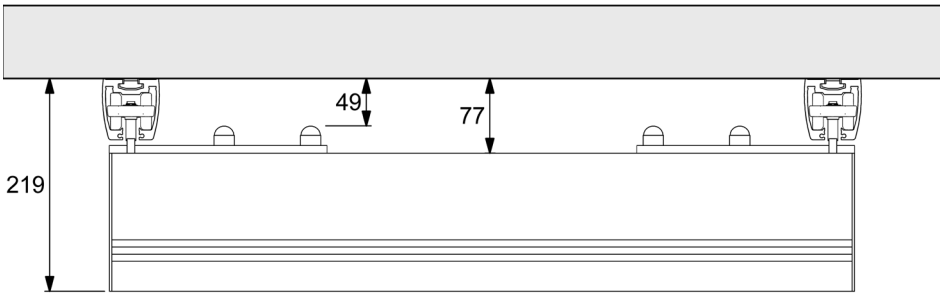

Rail combinations in area covering systems

Standard ceiling fixings – underhung

Type 29

- Rail H62 (CC)
- Underhung rail H62
- 50 mm traverse trolley.

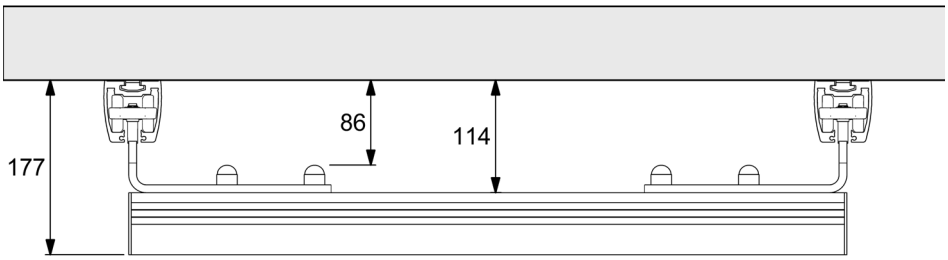

Type 30

- Rail H62 (CC)
- Underhung rail H112
- 50 mm traverse trolley.

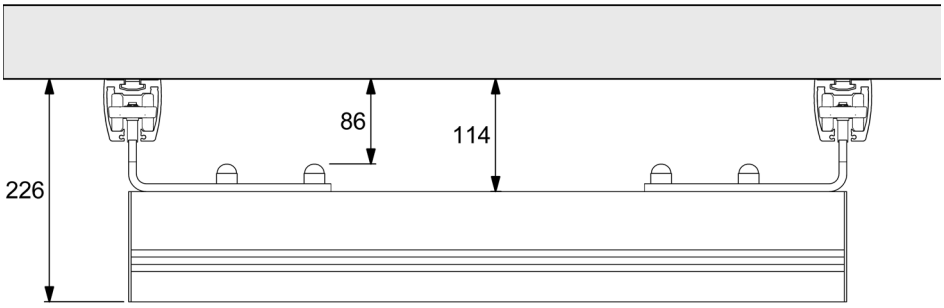

Type 31

- Rail H62 (CC)
- Underhung rail H142.
- 50 mm traverse trolley.

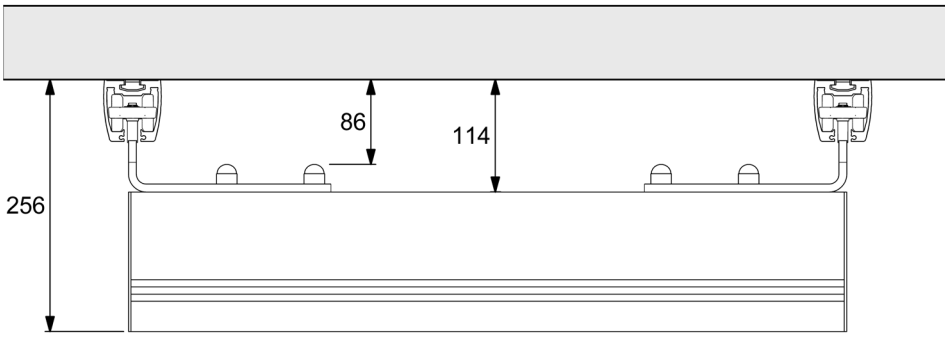

Rail combinations in area covering systems

Directly against ceiling - underhung

Type 32

- Rail H62 (CC)
- Underhung rail H62
- + 50 mm extended traverse trolley.

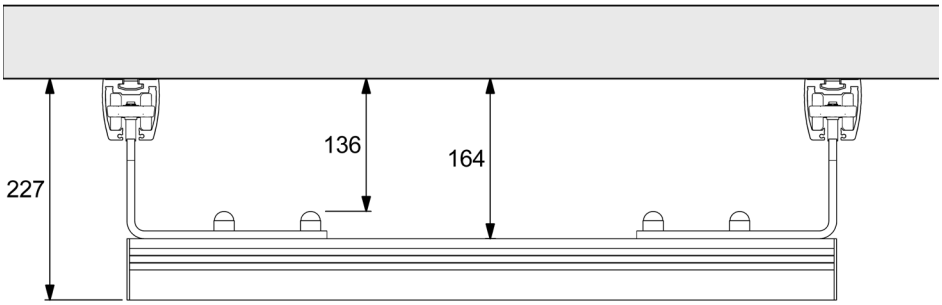

Type 33

- Rail H62 (CC)
- Underhung rail H112
- + 50 mm extended traverse trolley.

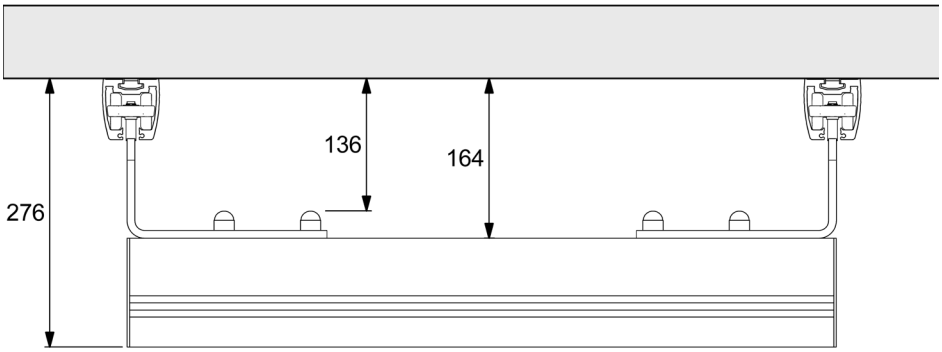

Type 34

- Rail H62 (CC)
- Underhung rail H142
- + 50 mm extended traverse trolley.

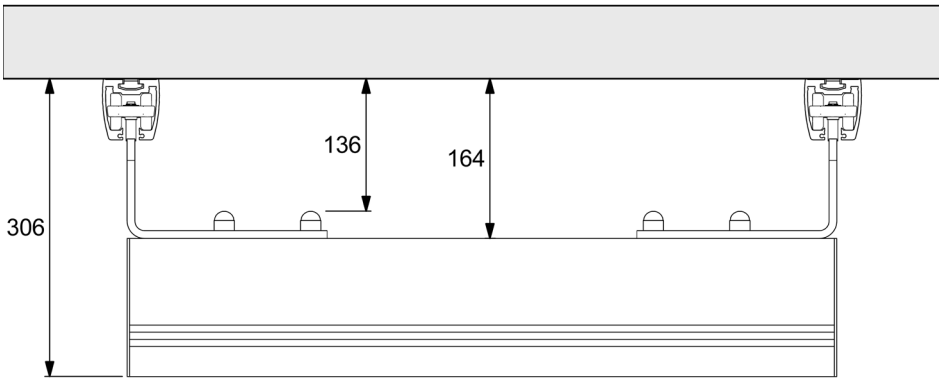

Rail combinations in area covering systems

Wall rail directly on wall

Type 35

- Rail H85 W
- Underhung rail H112
- Flexible traverse trolley.

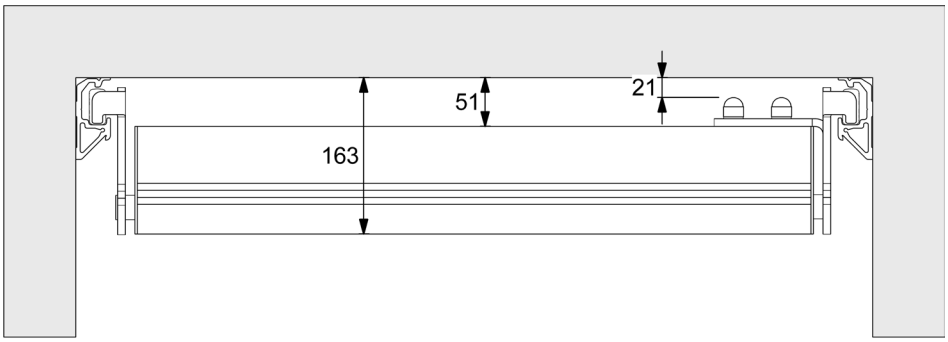

Type 36

- Rail H85 W
- Underhung rail H142
- Flexible traverse trolley.

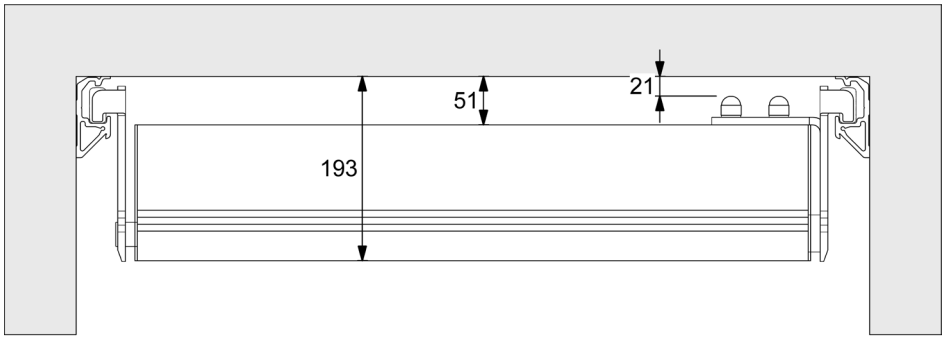

Rail combinations in area covering systems

Embedded in ceiling

Type 37

- Rail H62 (CC)
- Single rail system inset flush with ceiling.

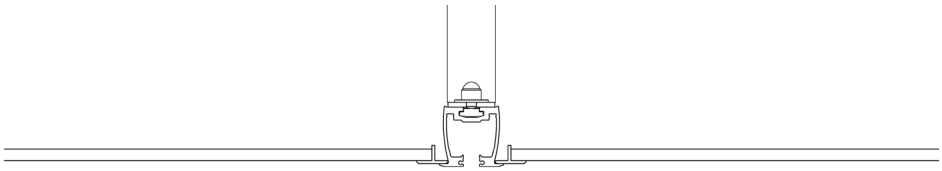

Type 38

- Rail H62, inset flush with ceiling
- Underhung rail H112
- 50 mm traverse trolley.

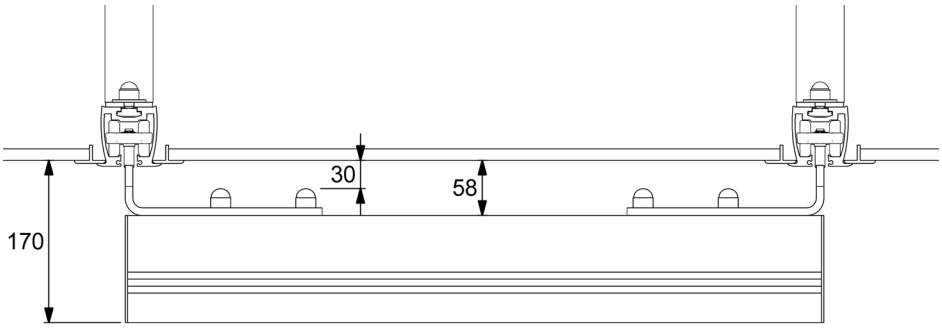

Type 39

- Rail H62, inset flush with ceiling
- Underhung rail H142
- 50 mm traverse trolley.

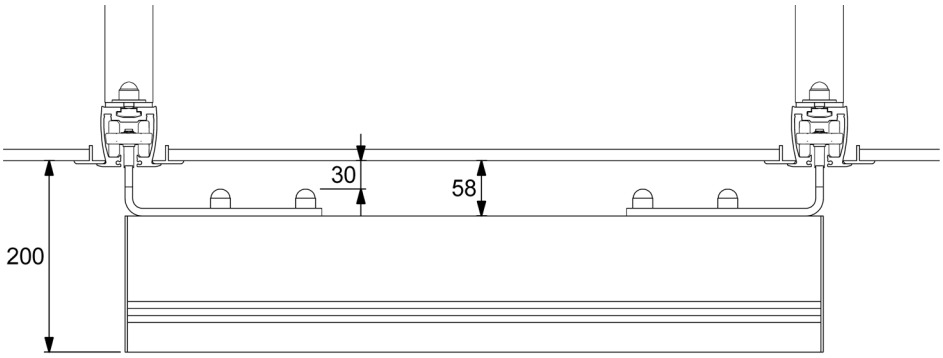

Rail combinations in area covering systems

Embedded in ceiling

Type 40

- Rail H62, inset flush with ceiling
- Underhung rail H112
- + 50 mm extended traverse trolley.

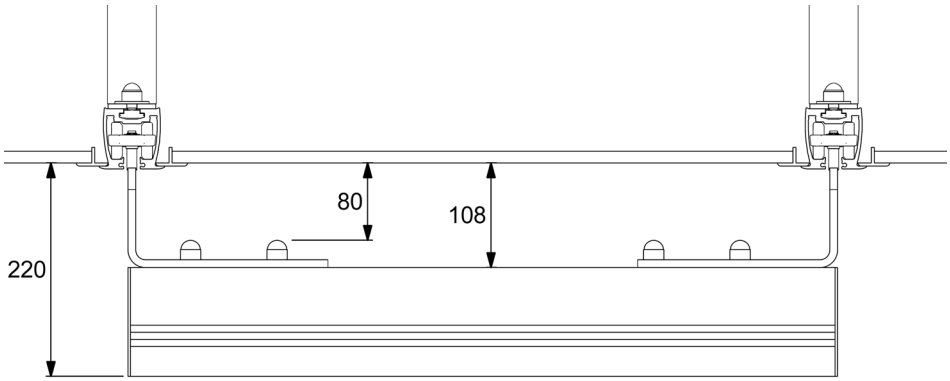

Type 41

- Rail H62, inset flush with ceiling
- Underhung rail H142
- + 50 mm extended traverse trolley,

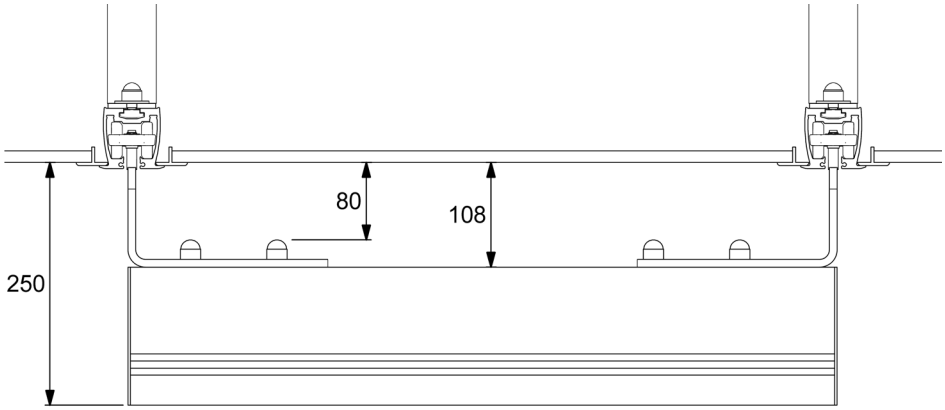

Outer hoisting point

Centre-hung traverse rail

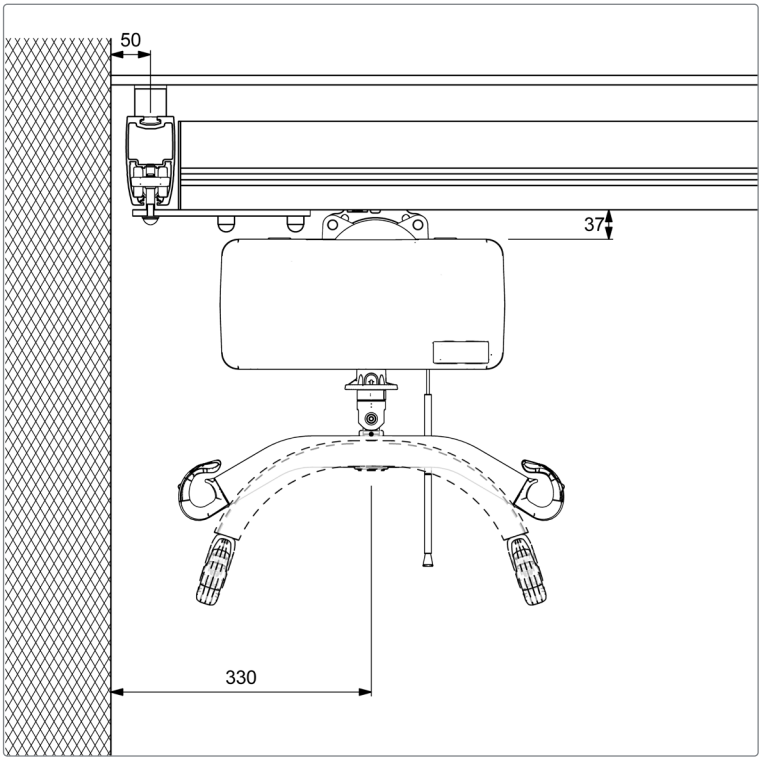

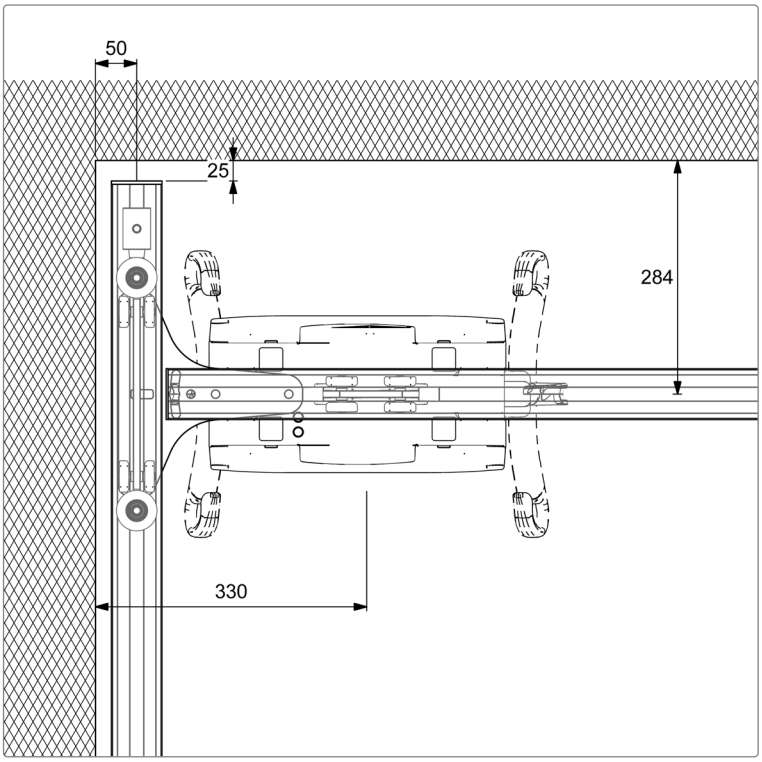

Outer hoisting point

Underhung traverse rail

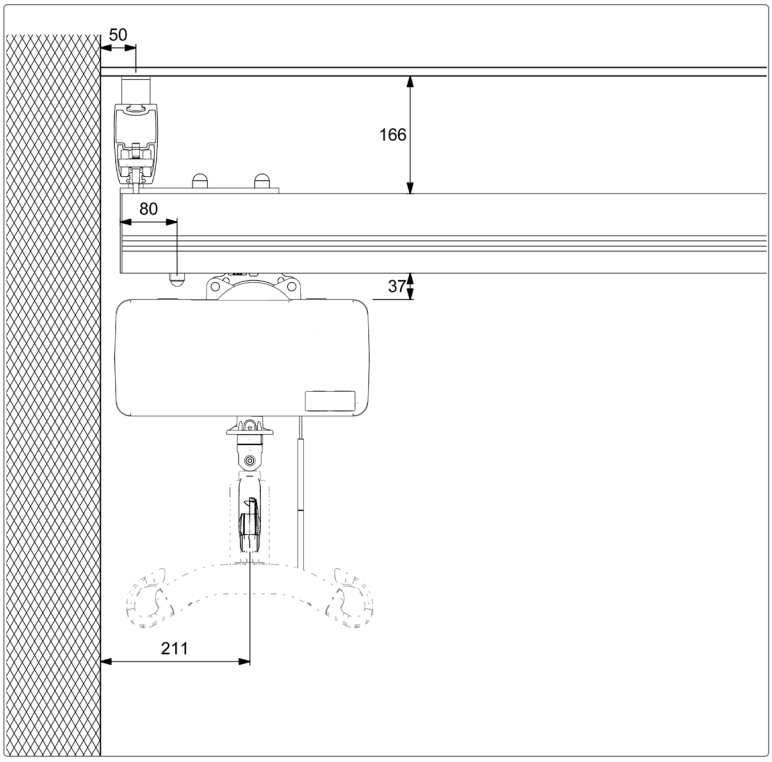

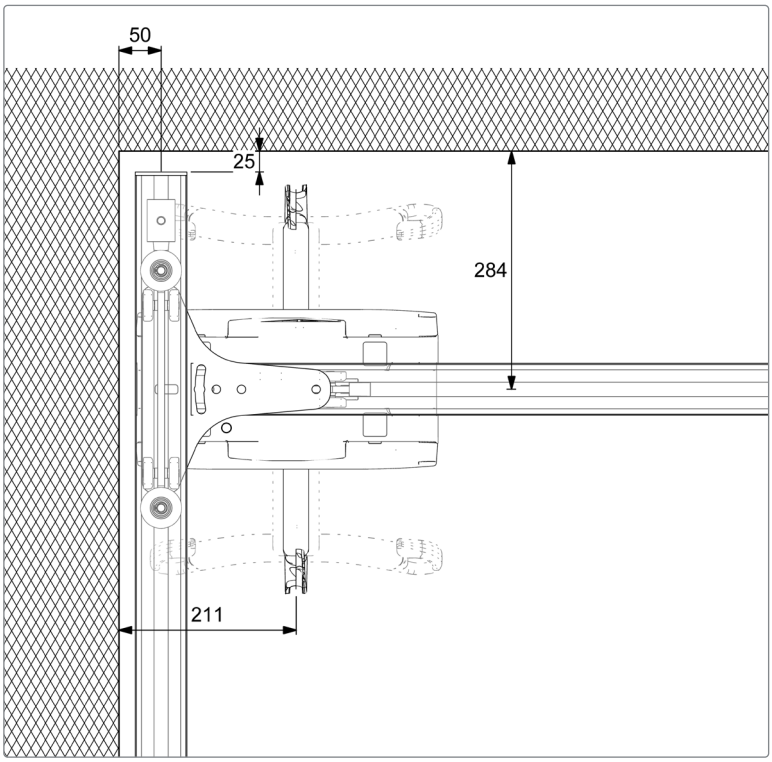

Rail combinations in coupling systems

Standard ceiling fixings – underhung

Type 42

- Rail H62 (CC)
- Underhung rail H62
- Boxed traverse trolley

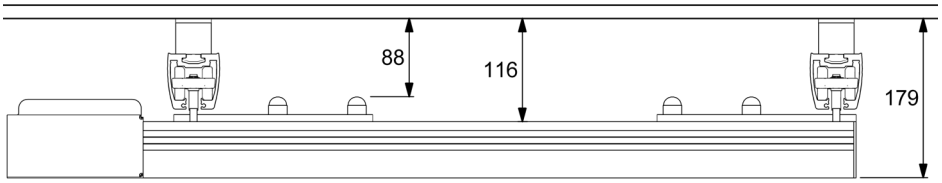

Type 43

- Rail H62 (CC)
- Underhung rail H142
- Boxed traverse trolley

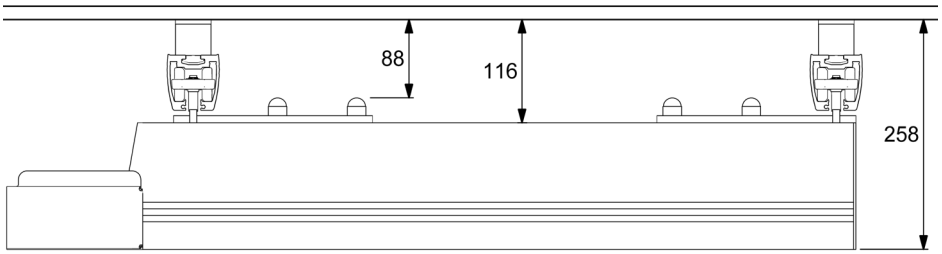

Type 44

- Rail H62 (CC)
- Underhung rail H142
- 50 mm traverse trolley

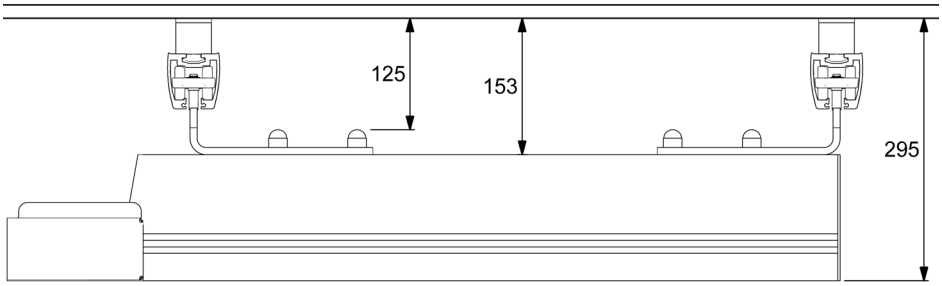

Rail combinations in coupling systems

Standard ceiling fixings – underhung

Type 45

- Rail H62 (CC)
- Underhung rail H62
- 50 mm traverse trolley

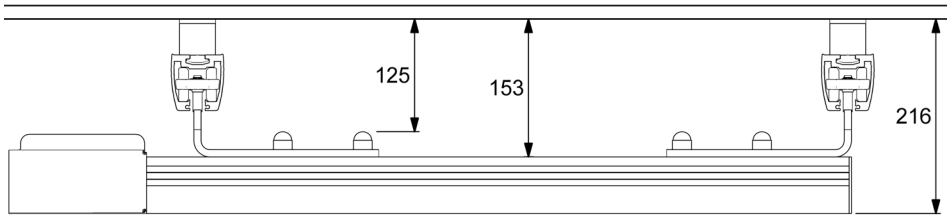

Type 46

- Rail H62 (CC)
- Underhung rail H62
- + 50 mm traverse trolley.

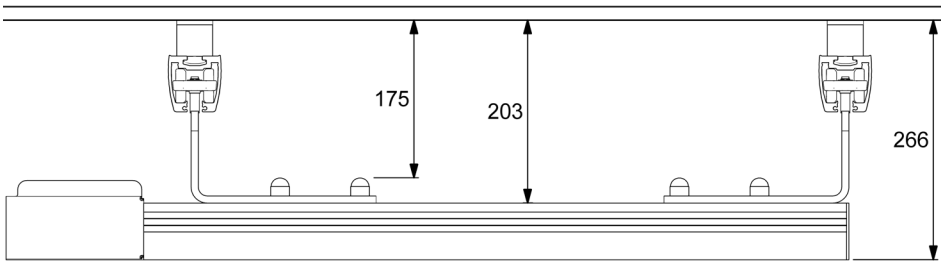

Type 47

- Rail H62 (CC)
- Underhung rail H142
- + 50 mm traverse trolley.

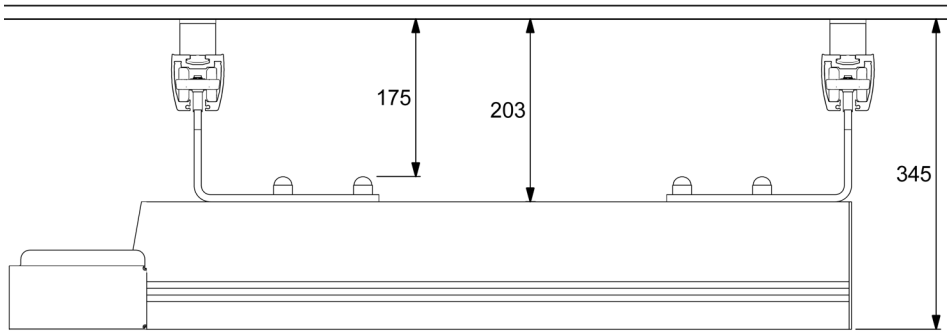

Rail combinations in coupling systems

Standard ceiling fixings – underhung

Type 48

- Rail H112 (CC)
- Underhung rail H142
- Boxed traverse trolley

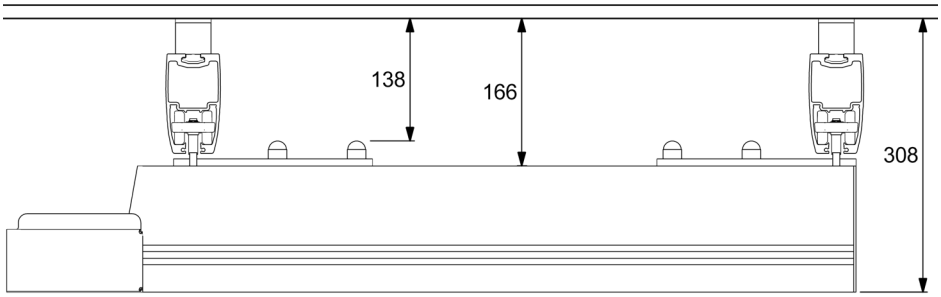

Type 49

- Rail H112 (CC)
- Underhung rail H142
- 50 mm traverse trolley

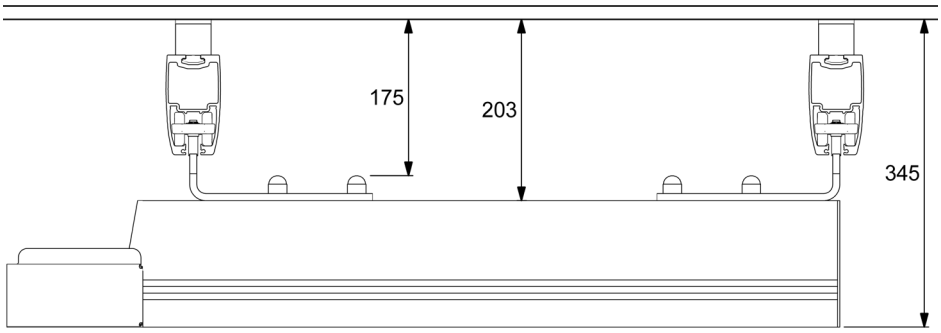

Type 50

- Rail H112 (CC)
- Underhung rail H142
- + 50 mm traverse trolley.

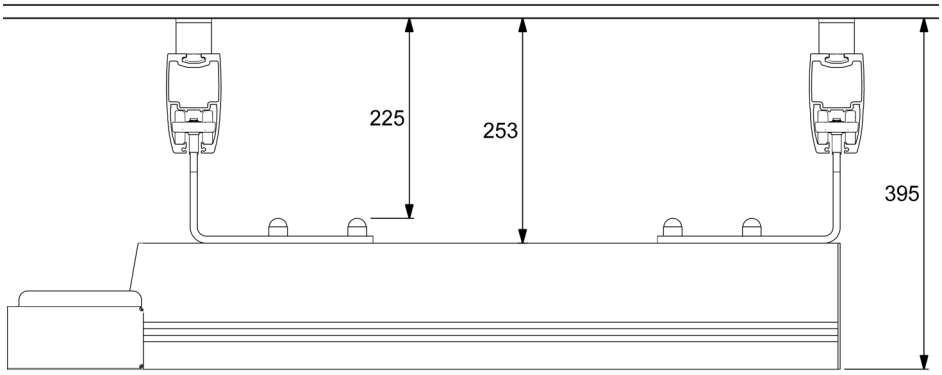

Rail combinations in coupling systems

Standard ceiling fixings – underhung

Type 51

- Rail H142 (CC)
- Underhung rail H142
- Boxed traverse trolley

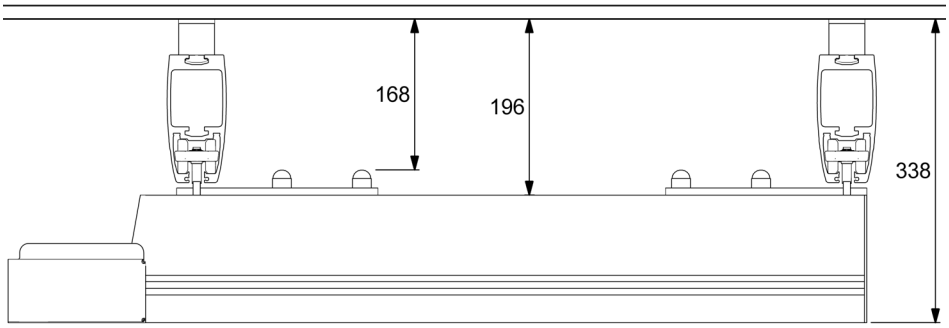

Type 52

- Rail H142 (CC)
- Underhung rail H142
- 50 mm traverse trolley

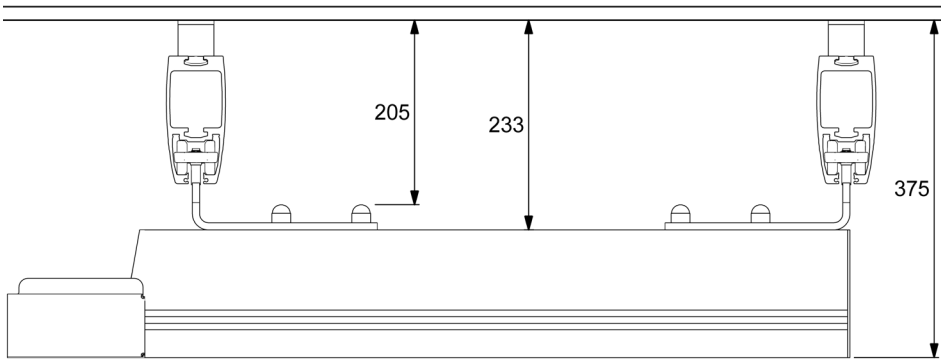

Type 53

- Rail H142 (CC)
- Underhung rail H142
- + 50 mm traverse trolley.

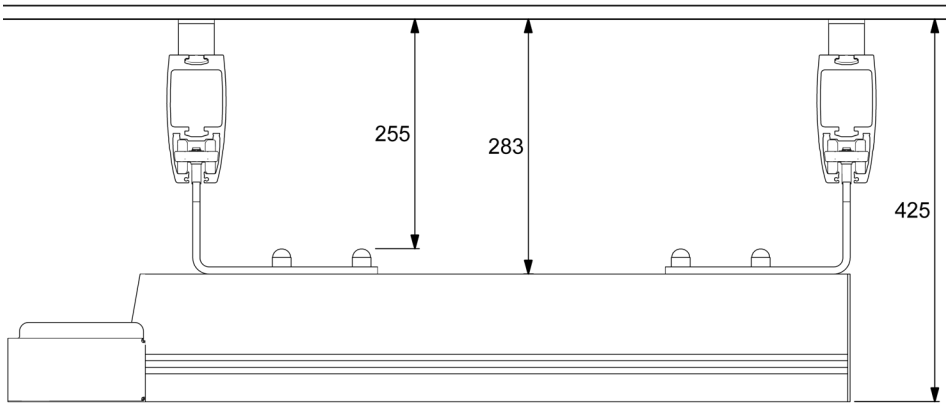

Technical drawing

Single coupling

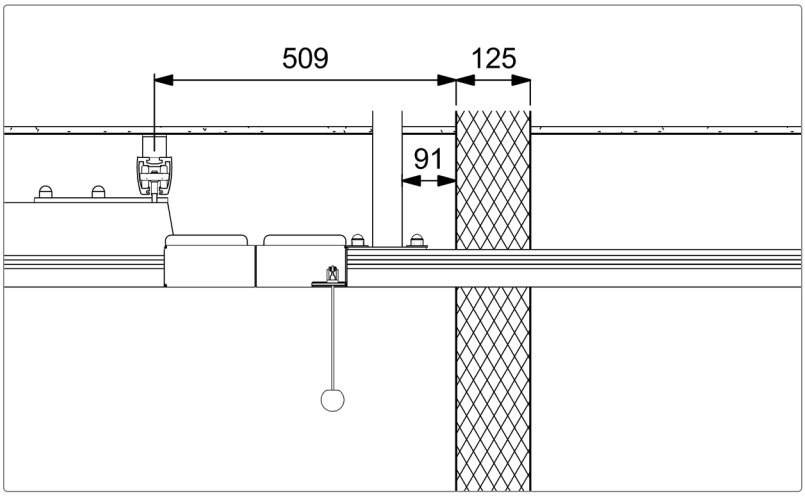

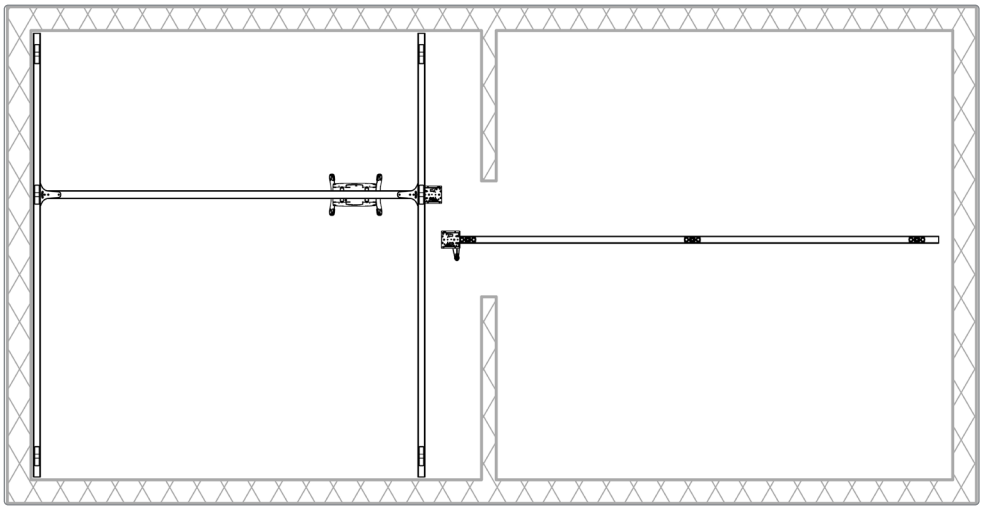

Technical drawing

Double coupling

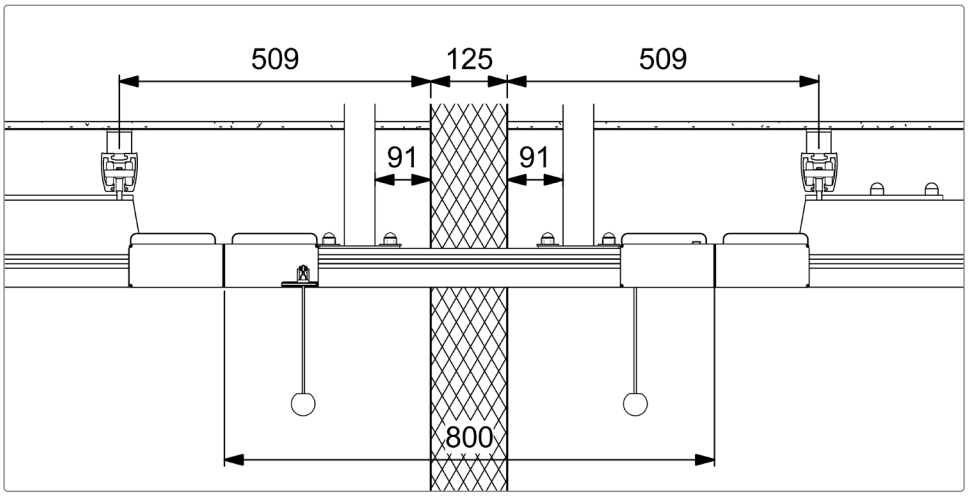

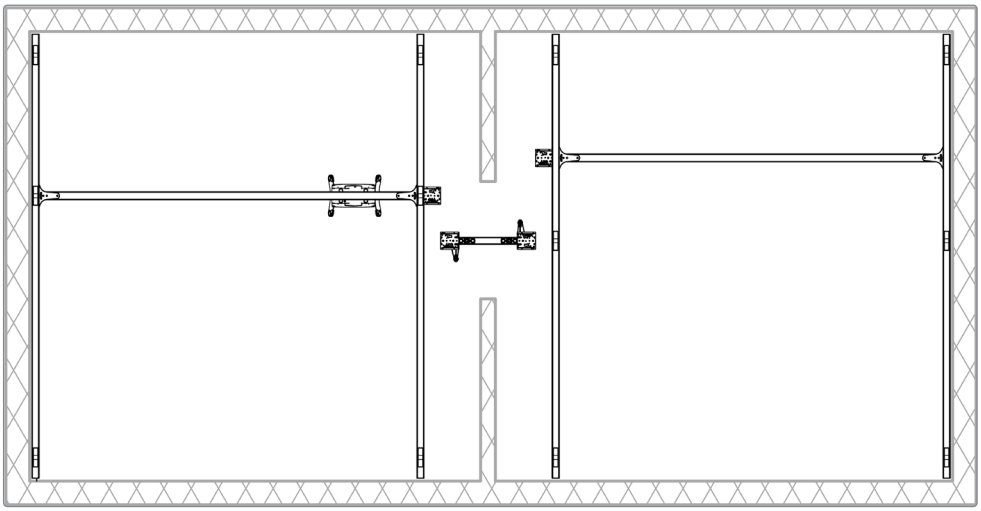

Technical drawing

Curves, rail switch

Curved rails are used where a change in direction of a single track is required.

Standard curves are supplied in 30°, 45°, 60° and 90° angles.

As a minimum, three fixings must be used per curved rail – one fixing at each end of the curve and one in the middle of the curve.

Curve 30°

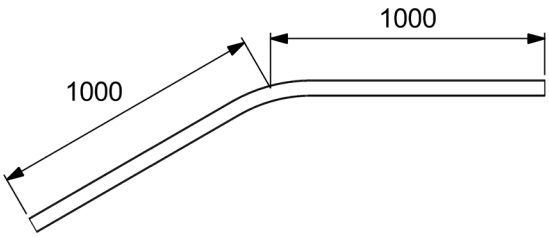

Curve 60°

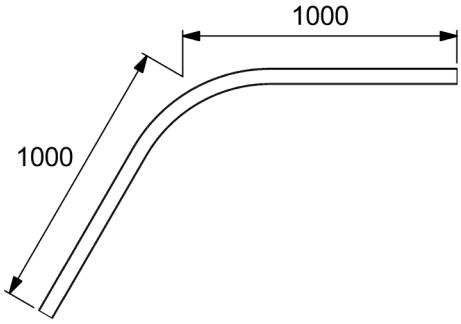

Curve 45°

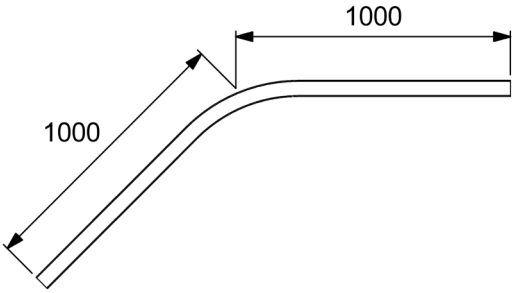

Curve 90°

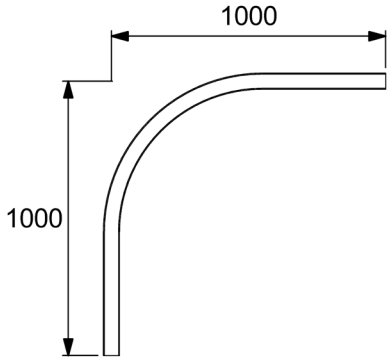

Rail switch

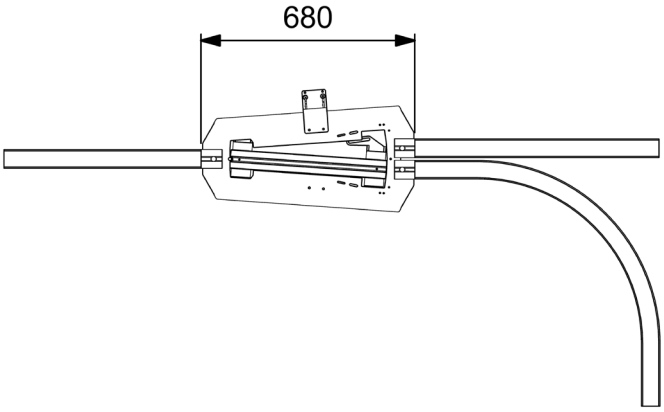

Passage through doorways

Sliding doors

Where a doorway track using coupling rail H62 is used, the door aperture and door must be made higher (than standard door height).

The height will vary from project to project depending on the finished ceiling height and the chosen combination of rail types (see dimensioned calculation of door aperture/ door plate for sliding doors on p. 40).

Solution:

H62 rail will typically be installed at the centre of the door aperture; for this, the H62 rail will pass straight through the door header and the underside of the H62 rail will be mounted such that it is flush with the lower edge of the door header.

The sliding door rail will end against the H62 rail and be mounted in a 3-piece wheel suspension – the final wheel suspension will end just before the H62 rail and the remaining part of the sliding door will protrude freely – when using a 3-piece wheel suspension, this will be gripped by the top/bottom of the sliding door rail and thus travel easily in the rail without tipping.

When installing the sliding door sheath, this may not be more than 6 mm under the H62 rail, as it may otherwise prevent the free running of the hoist along its track.

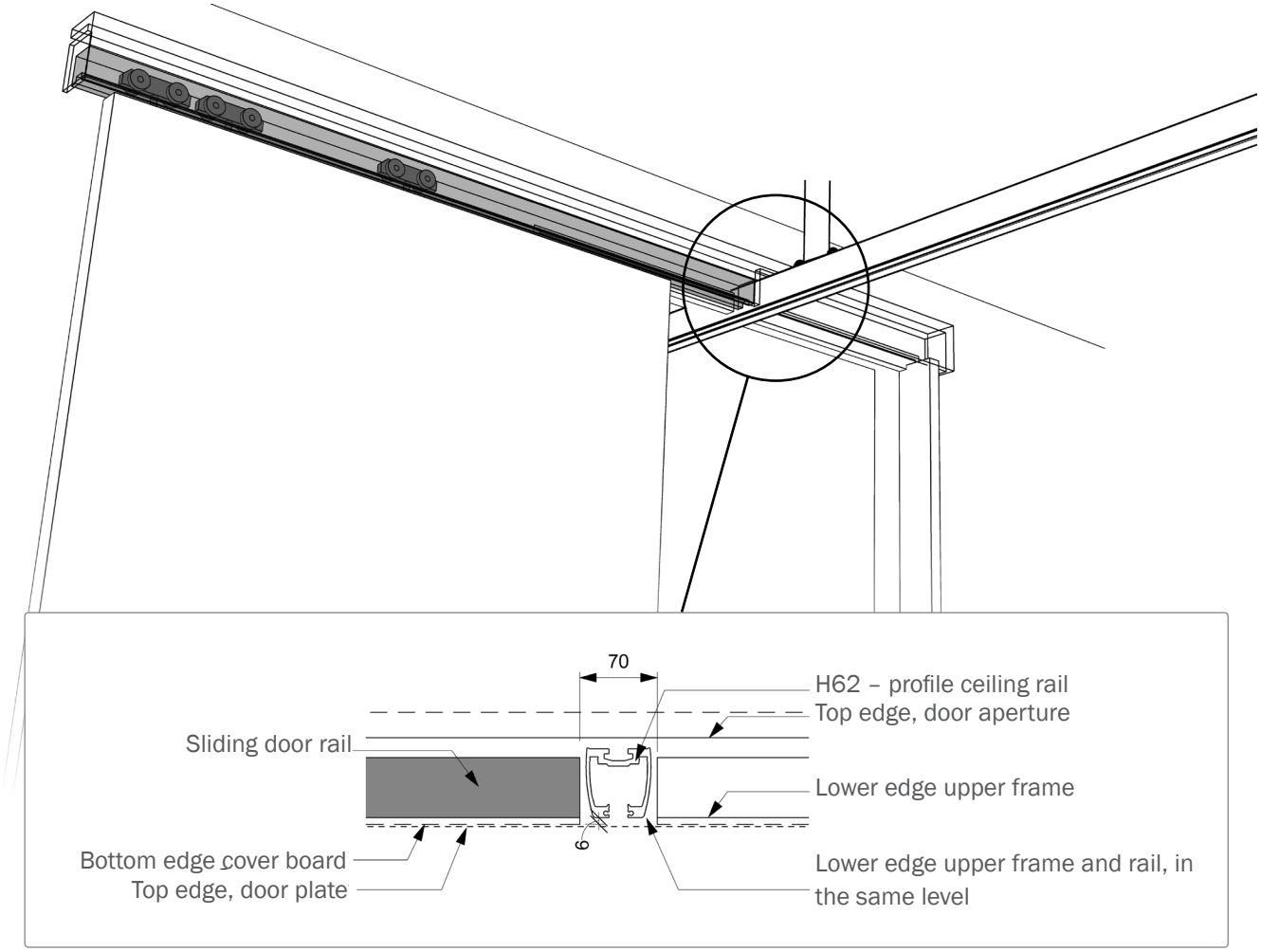

Passage through doorways

Side-hung door

Where a doorway track using coupling rail H62 is used, the door aperture and door must be made higher (than standard door height).

The height will vary from project to project depending on the finished ceiling height and the chosen combination of rail types (see dimensioned calculation of door aperture/ door plate for side-hung doors on p. 41).

Solution:

An H62 rail will typically be installed at the centre of the door aperture; for this, the H62 rail will pass straight through the door header and the underside of the H62 rail will be mounted such that it is flush with the lower edge of the door frame, and the door can close as normal.

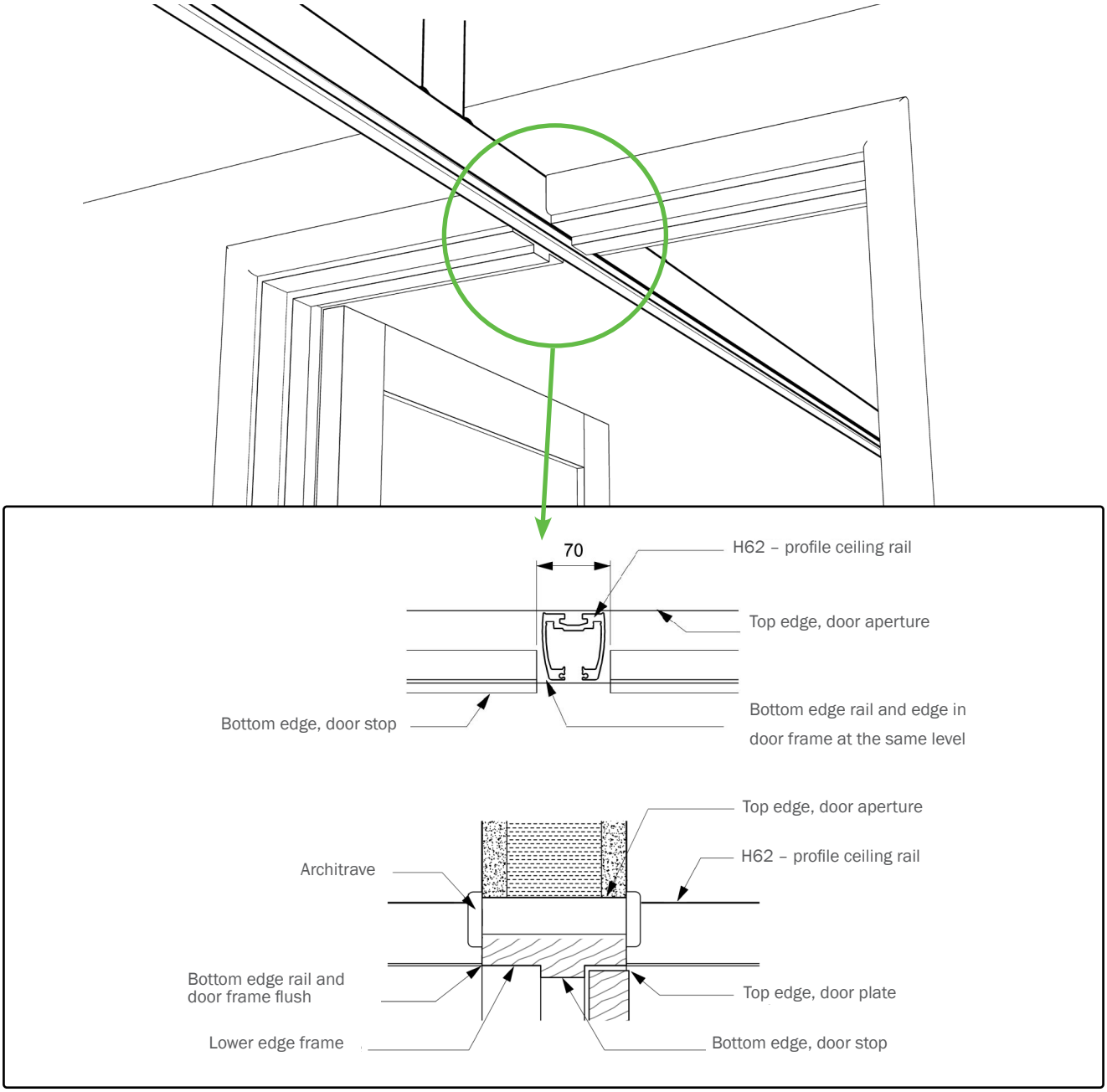

Passage through doorways

Continuous traverse rail

Where rail systems pass between rooms, the continuous traverse rail across a wall/door will necessitate the adaptation of the door/wall.

The height will vary from project to project depending on the finished ceiling height and the chosen combination of rail types (see dimensioned calculation of the wall height for continuous traverse systems on p. 42).

Solution:

Here, the moving traverse rail will typically be installed at a distance from the ceiling (allowing room for detectors, lamps and similar). The primary rails may be installed flush with the ceiling or under it.

For this solution, the final height of the wall will be adjusted to suit the above – such that there will be space across the wall for the moving traverse rail.

The height of doors will similarly be adjusted according to the above and the door solution may be integrated in the wall, or may be an externally placed solution. Neither can have a door header.

Typically, a moving traverse rail will be placed across the wall (and will thus be 'closed' off without an opening between the two rooms). This solution also allows for a cabinet to be built against the wall in which to park the hoist/sling bar and to store slings.

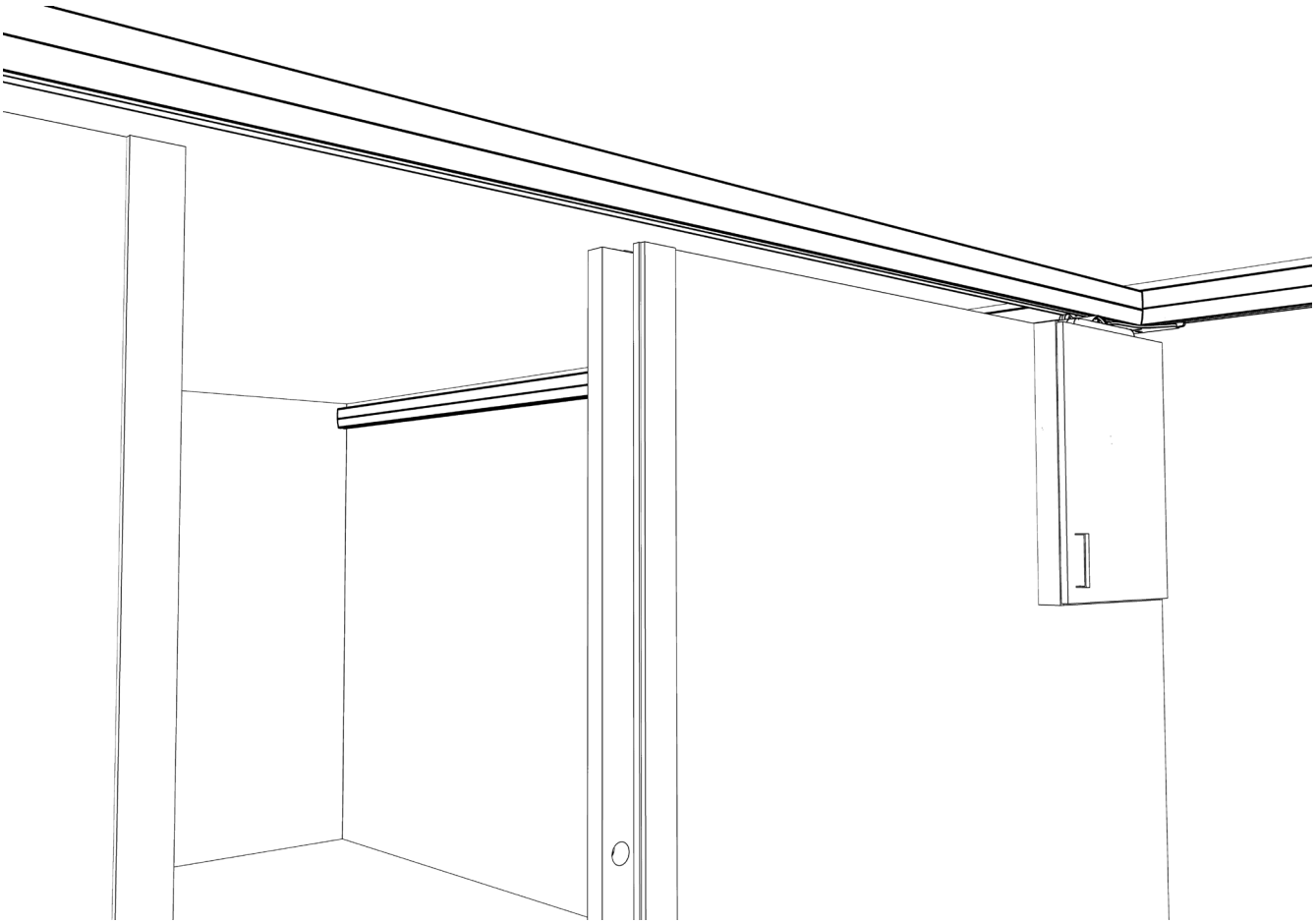

Calculating door aperture/door plate

Sliding doors

Use 3 trolleys when installing sliding door

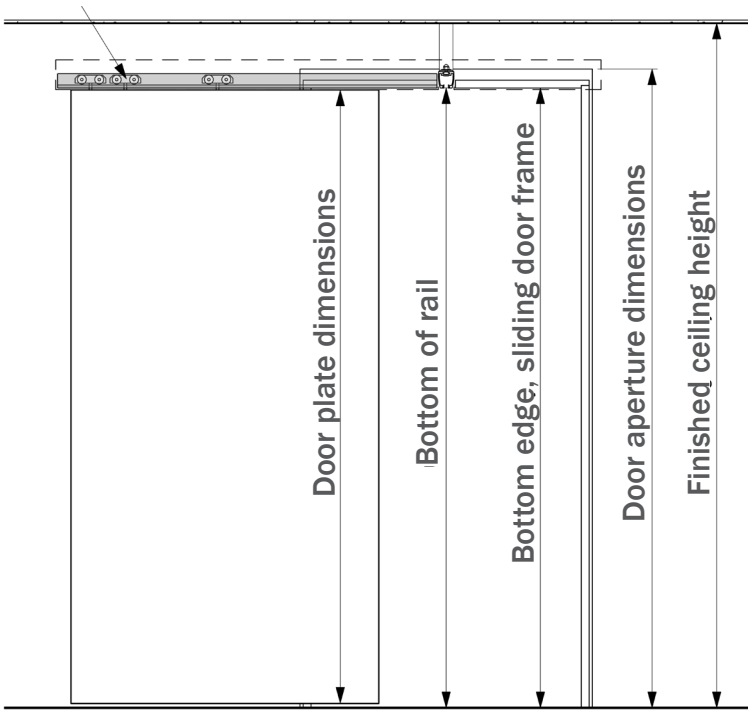

The above will give door plate dimensions of _____

Basis for the above:

H62 rail dimensions:	Width: 59 mm, Height: 62 mm
Ceiling height:	Stated finished ceiling height
Lower edge of H62 rail:	Finished ceiling height, minus chosen rail combination type
Upper side of H62 rail:	Lower edge of H62 rail + H62 rail height
Lower edge of wall aperture:	Upper edge of H62 rail + 10 mm

Door plate dimensions:

For sliding door:	Lower edge of H62 rail – 20 mm (allowing 10 mm tolerance at bottom/top)

Project: _____

Rail combination: _____

Date: _____

Comments: _____

_____

_____

Calculating door aperture/door plate

Side-hung door

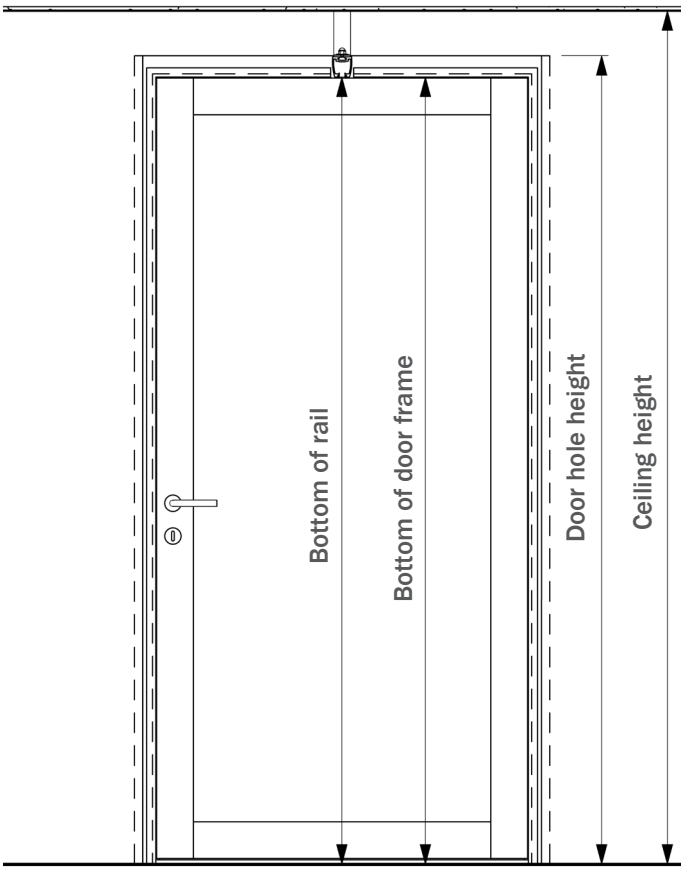

The above will give door plate dimensions of _____

Basis for the above:

H62 rail dimensions:	Width: 59 mm, Height: 62 mm
Ceiling height:	Stated finished ceiling height
Lower edge of H62 rail:	Finished ceiling height, minus chosen rail combination type
Upper side of H62 rail:	Lower edge of H62 rail + H62 rail height
Lower edge of wall aperture:	Upper edge of H62 rail + 10 mm

Door plate dimensions:

For sliding door:	Lower edge of H62 rail – 20 mm (allowing 10 mm tolerance at bottom/top)

Project: _____

Rail combination: _____

Date: _____

Comments: _____

_____

Continuous traverse rail, heights

Elevation for solution –
for adding dimensions.

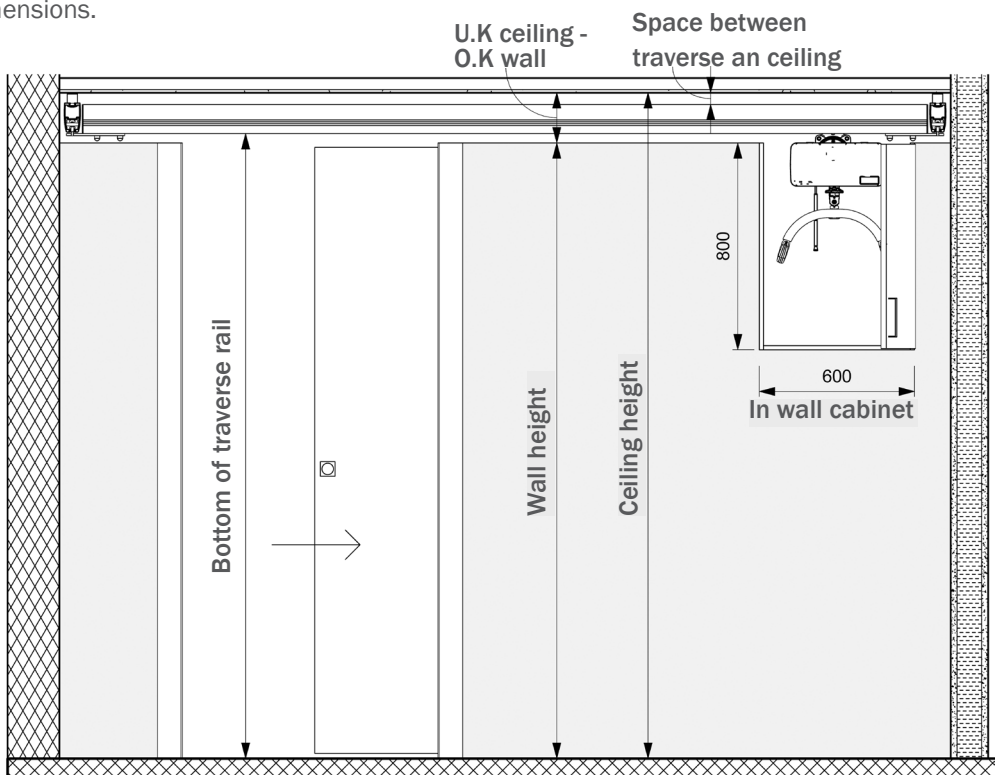

Basis for the above:

Rail combination: _____

Finished ceiling height: _____

Height of traverse rail: _____

Free space above traverse rail: _____

Free space beneath traverse rail: _____

Dimensions from UK. Ceiling – OK. Wall: _____

_____

Dimensions of cabinet: _____ (Dimensions are for guidance only, and can change)

Wall height: _____ (Be aware of possible uneven places/drop in floor)

Project: _____

Rail combination: _____

Date: _____

Comments: _____

_____

Cutout section for hoist in wall

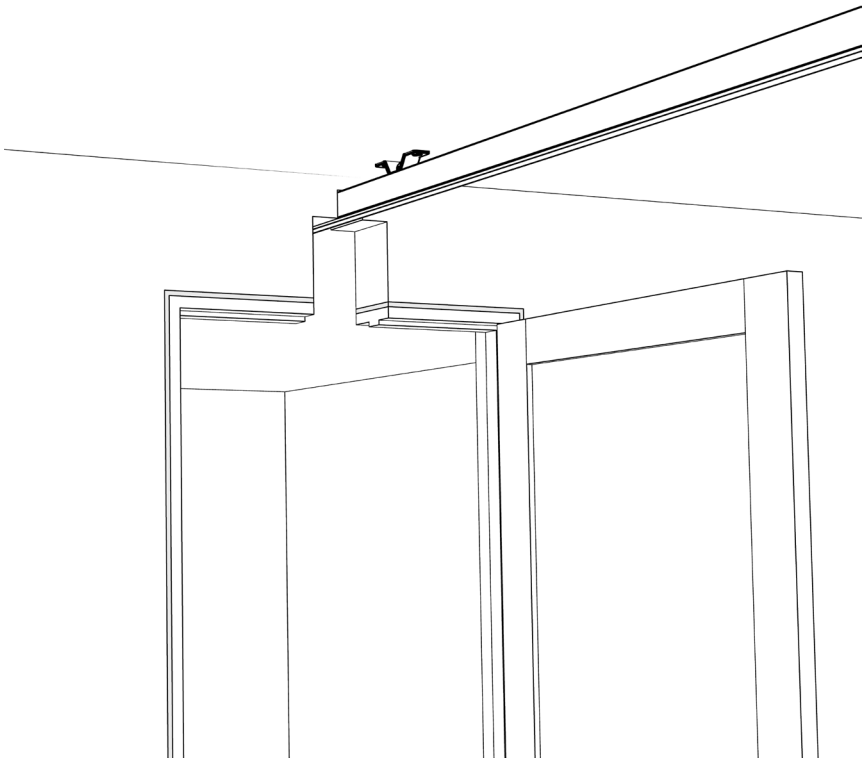

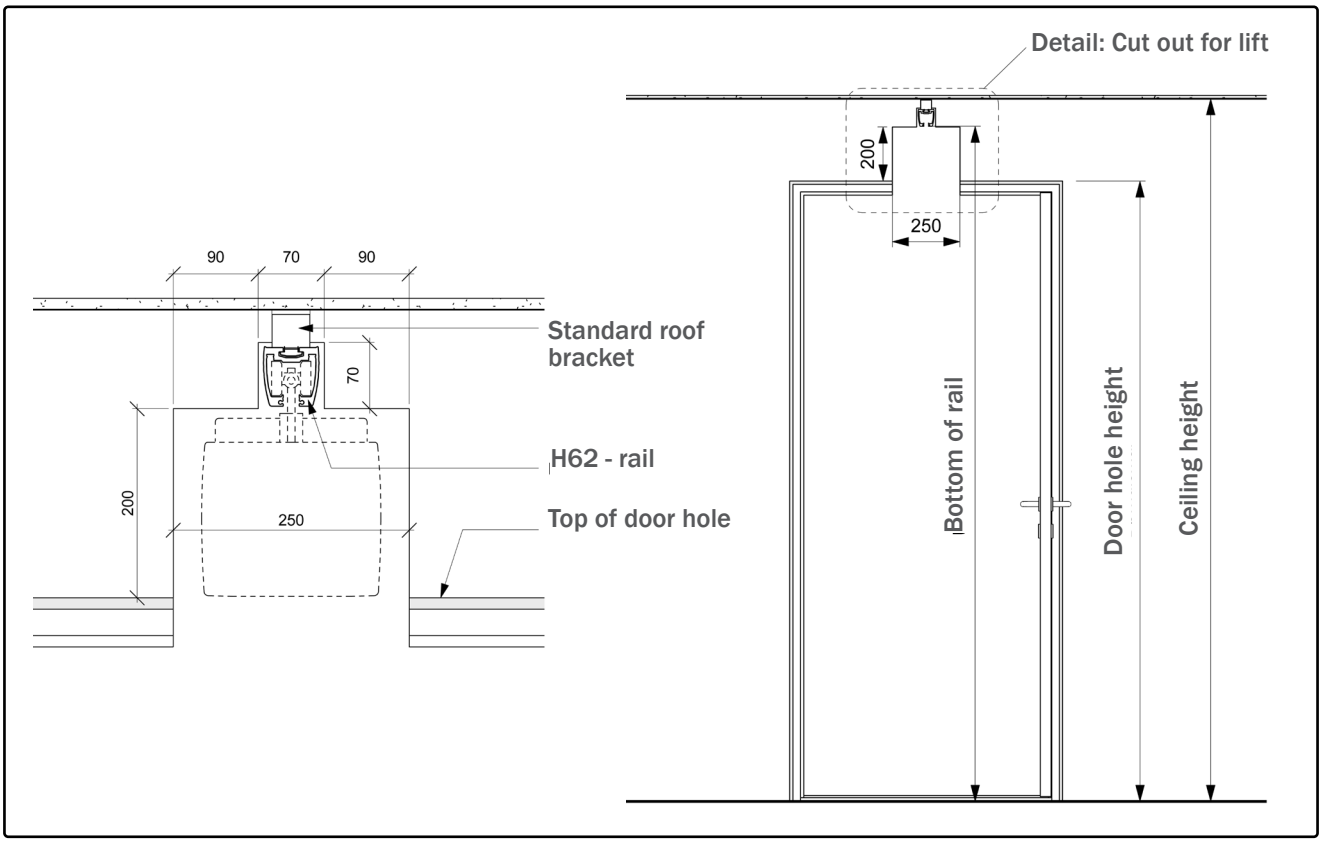

Swing solution

Molift Nomad

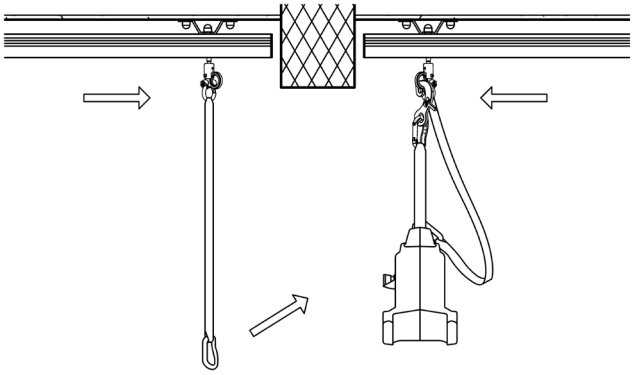

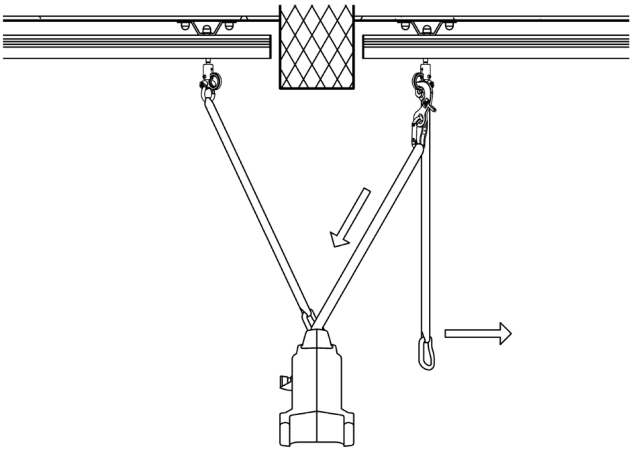

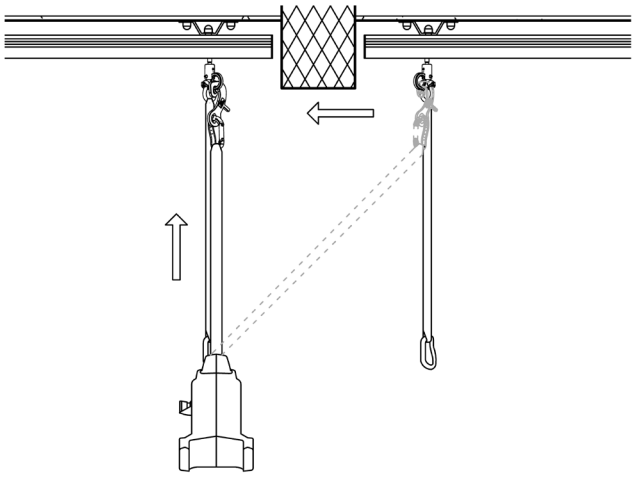

Swing solution

Molift Air

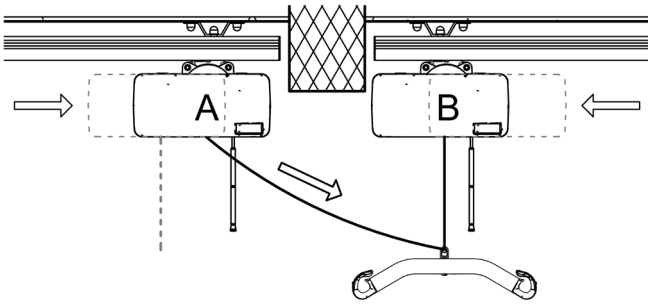

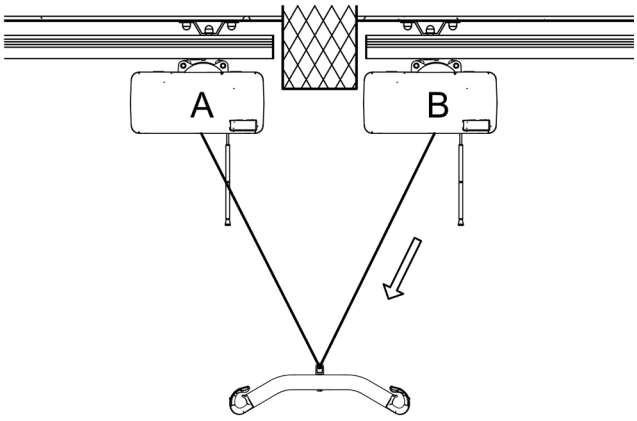

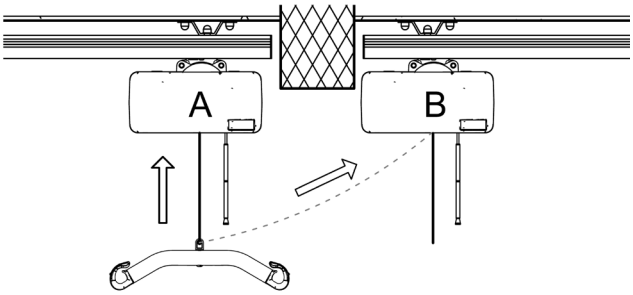

Dimensioned sketch

Molift Air with sling

Schematic diagram specifying dimensions with a person placed in a Molift Evosling MediumBack sling, size: Medium.

Dimensions

A: Standard ceiling fixing	40 mm
B: H62/H112/H142 rails	62/112/142 mm
C: UK. rail - to fixing point	385 mm/475 mm
D: Evosling MediumBack sling, size: M	980 mm
E: Evosling MediumBack sling, size: M	340 mm
F: Finished ceiling height	

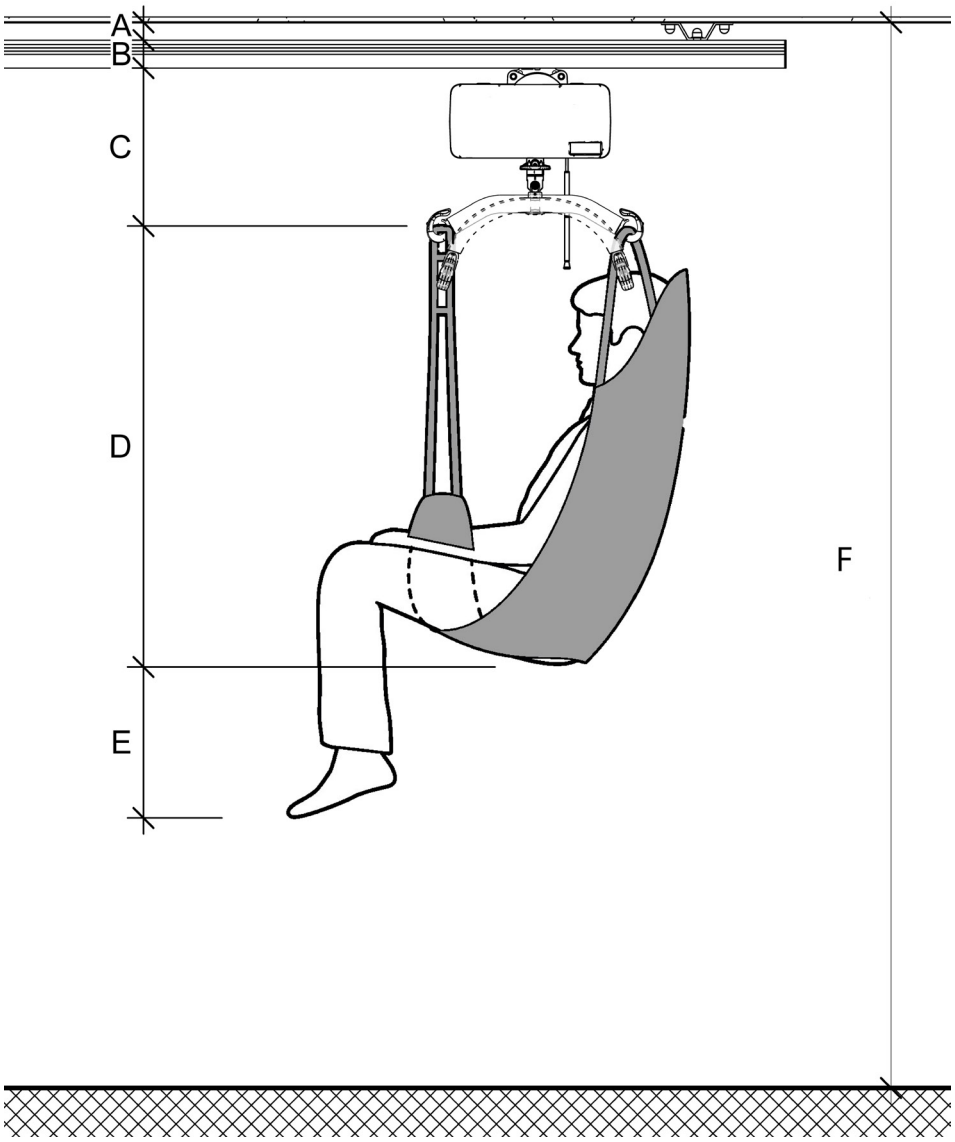

Fixings

Ceiling

Standard ceiling fixing

Standard ceiling fixings are used for installations where the rail must run as close to the ceiling as possible. Ceiling fixings can be installed on all types of ceiling including concrete, hollow-core concrete and wood. Ceiling fixings are attached to the ceiling with two reinforcing pieces.

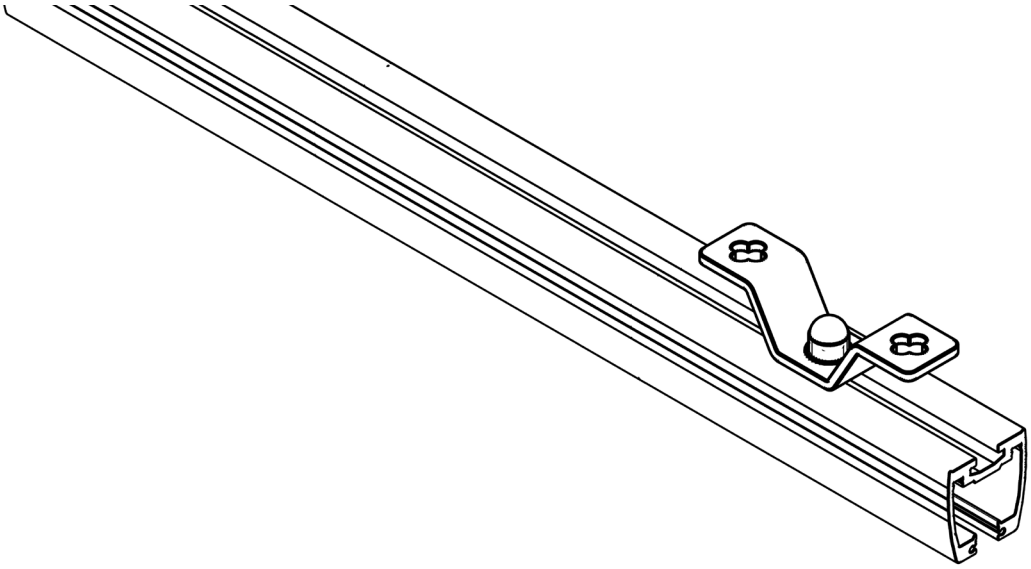

Adjustable telescopic ceiling fixings

Telescopic ceiling fixings are used when the rails must be slightly further away from the ceiling. The fixings can be adjusted from 80 mm to 200 mm. Telescopic fixings are attached to the ceiling using two reinforcing pieces.

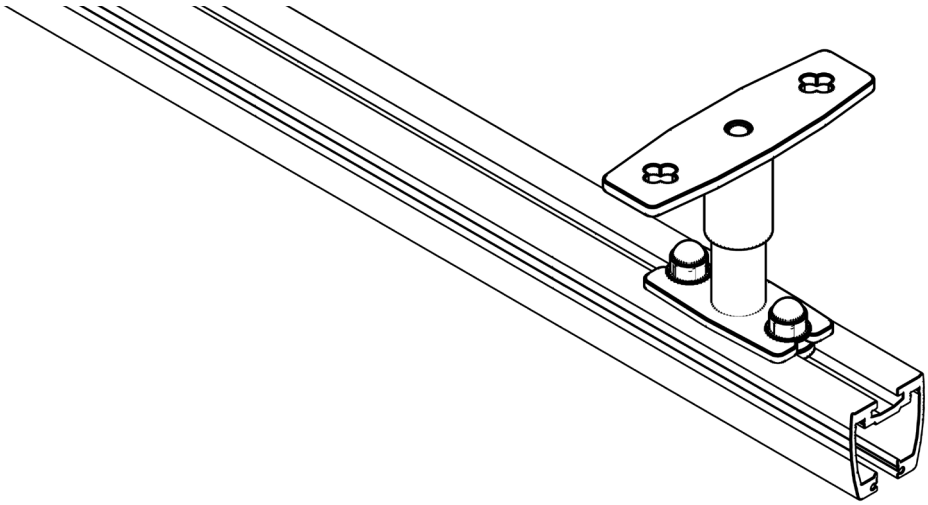

Fixings

Ceiling

Suspended adjustable telescopic ceiling fixings

Suspended telescopic ceiling fixings are typically used in rooms with high ceilings, so that for instance the rail can be placed under the suspended ceiling or simply at the normal installation and usage height. The fixings can be adjusted from 190 mm to 2000 mm.

Suspended telescopic fixings are attached to the ceiling with two reinforcing pieces.

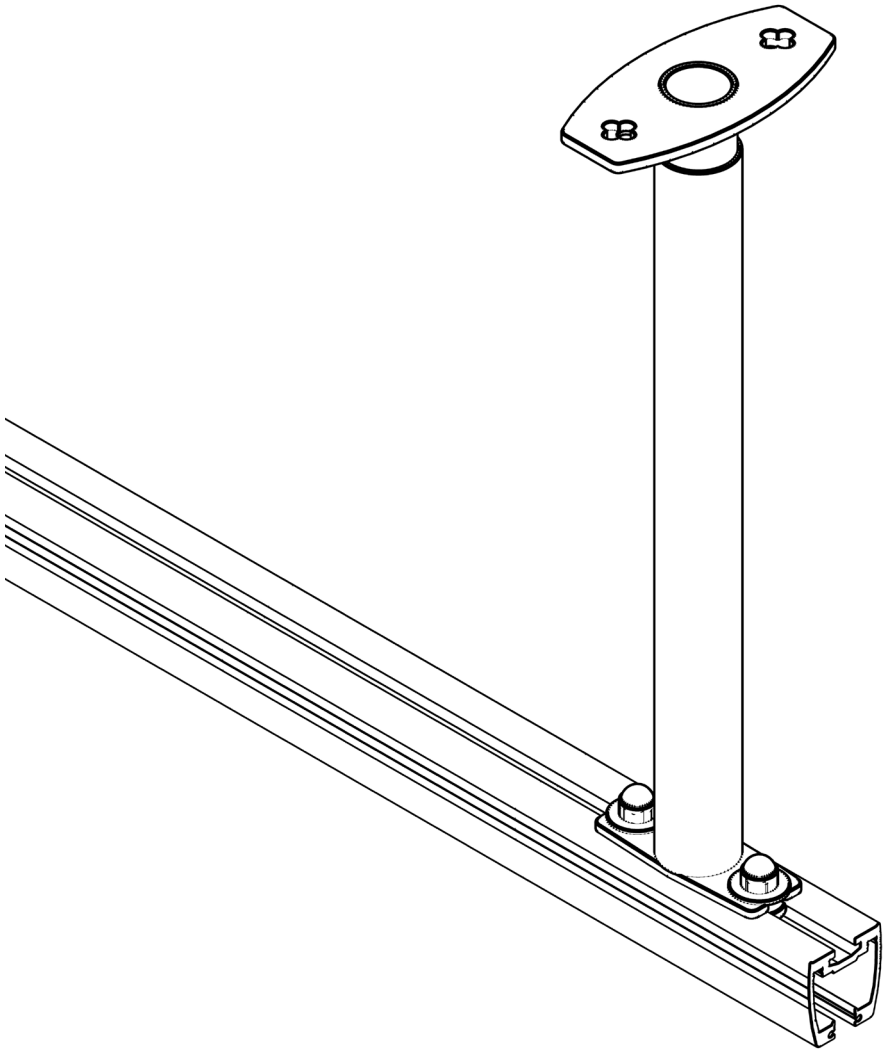

Fixings

Ceiling

Stabilisation fixings

Stabilisation fixings are used as side supports for installations where the suspension height is considerable. They stabilise the rail system.

Stabilisation fixings are installed around the suspended ceiling fixings and attached to the ceiling or wall with a reinforcement piece.

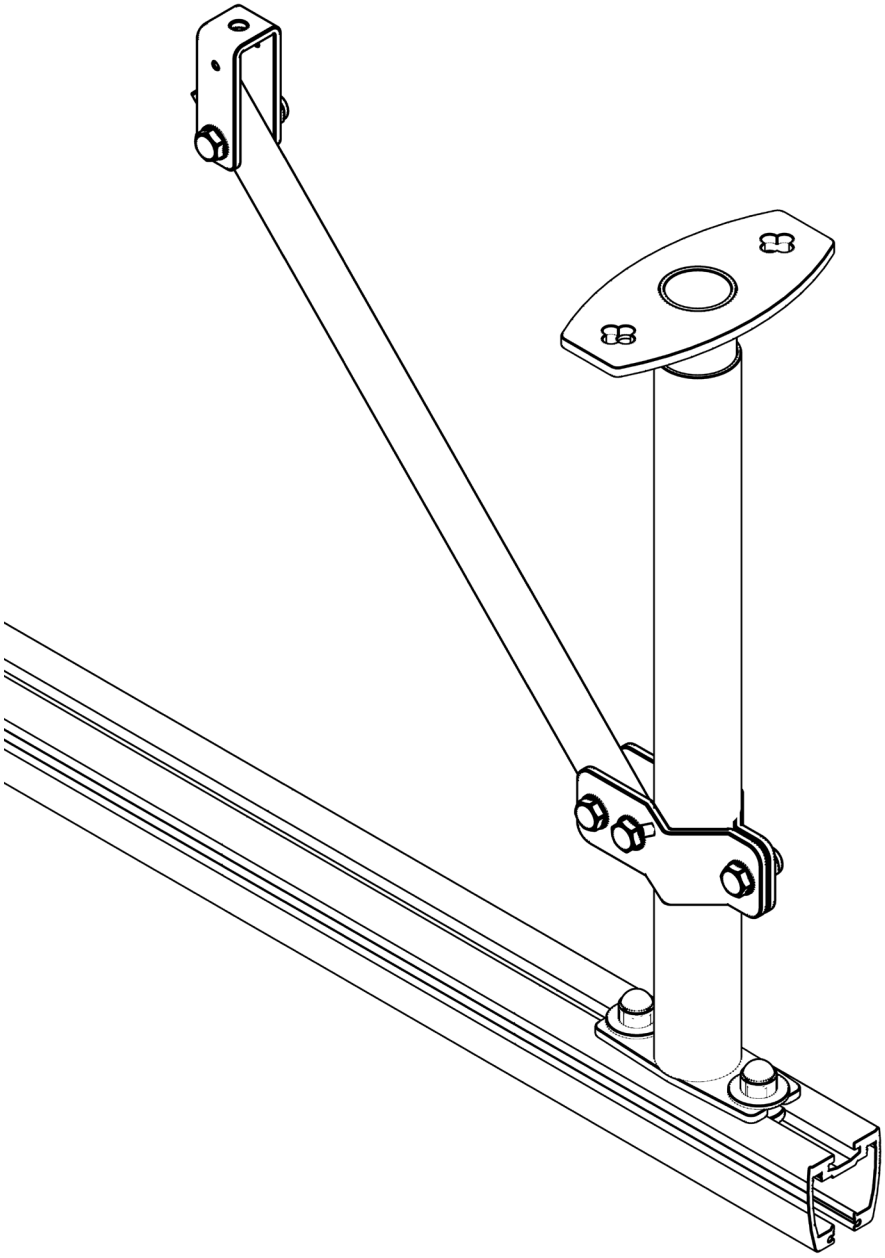

Fixings

Walls

Standard wall fixings – end-hung

Wall fixings are used for installation on vertical surfaces – typically where the ceiling cannot be accessed or is at an angle, or where the ceiling is very high. This approach avoids unsightly suspended fixings.

Wall fixings can be attached to all types of wall including concrete, light-weight concrete, wood and plaster – but for plasterboard walls, there must be a reinforcement behind the plasterboard.

Wall fixings are attached to the wall with two reinforcing pieces.

End-hung

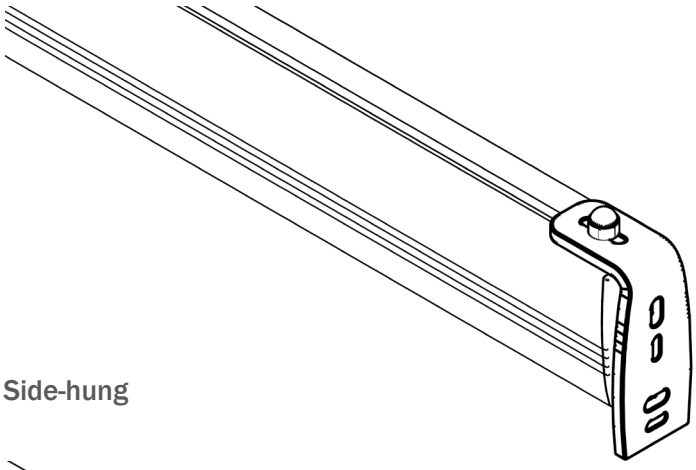

Side-hung

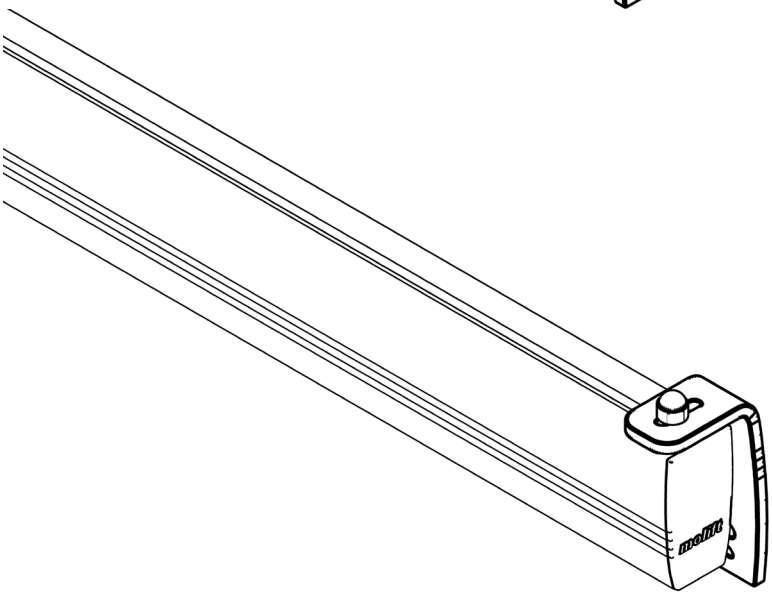

Fixings

Wall rail

Wall rail

Wall rails can be installed directly against the wall and have a telescopic traverse trolley that can accommodate up to 50 mm of uneven surfaces in the room.

The wall rail is installed directly against any type of wall. Installation on double layer plasterboard can be done without reinforcement behind the plasterboard.

For systems with a maximum load of 300 kg.

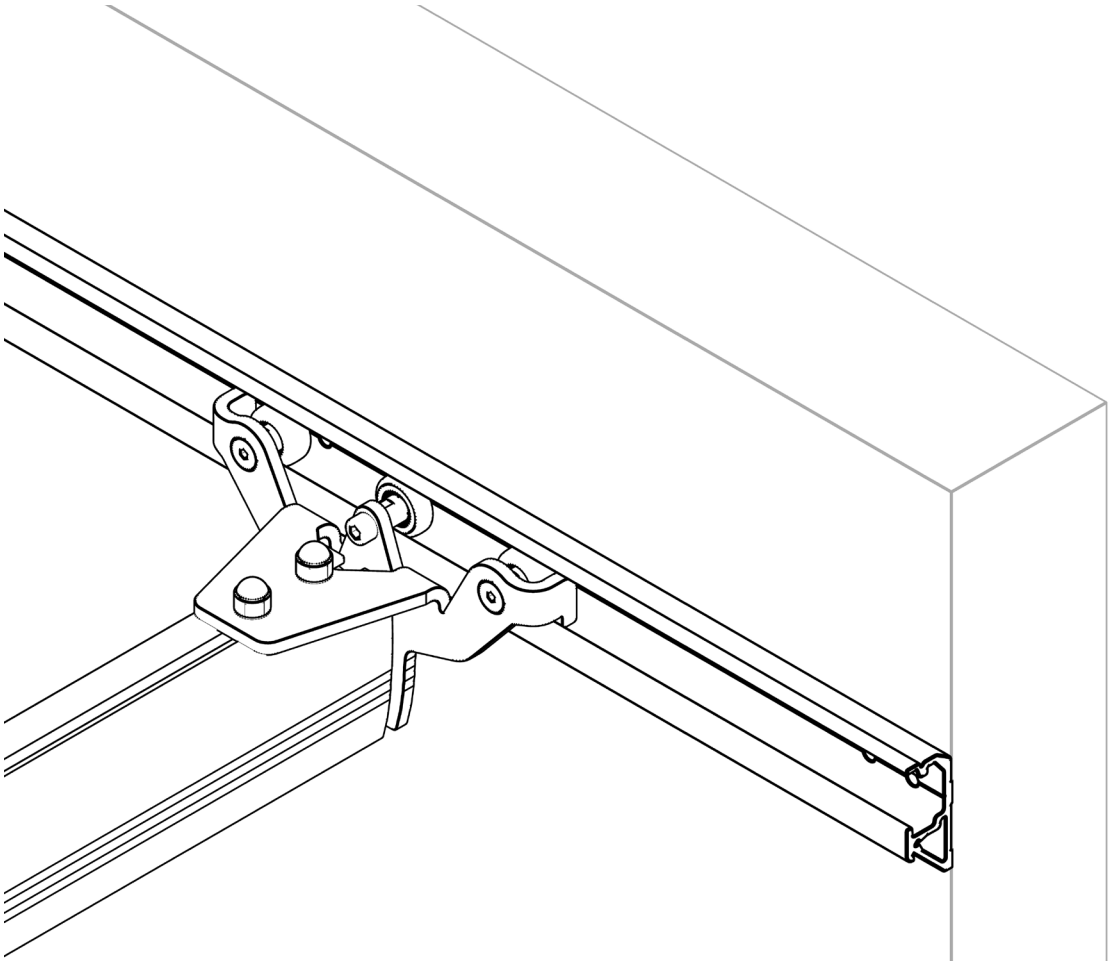

Fixings

Upright support fixing

Upright support fixings are used where there is no possibility for fixing on walls or ceilings.

This may for example include rooms where the ceiling is difficult to access (e.g., in a hospital) because of various fixed equipment and in rooms with large windows.

Upright support fixings transfer the load to the floor and are attached to the wall for sideways steering. Where there are windows, the upright supports are attached to the floor for sideways steering.

Upright support fixings come in 2 lengths: 2500 mm and 3500 mm.

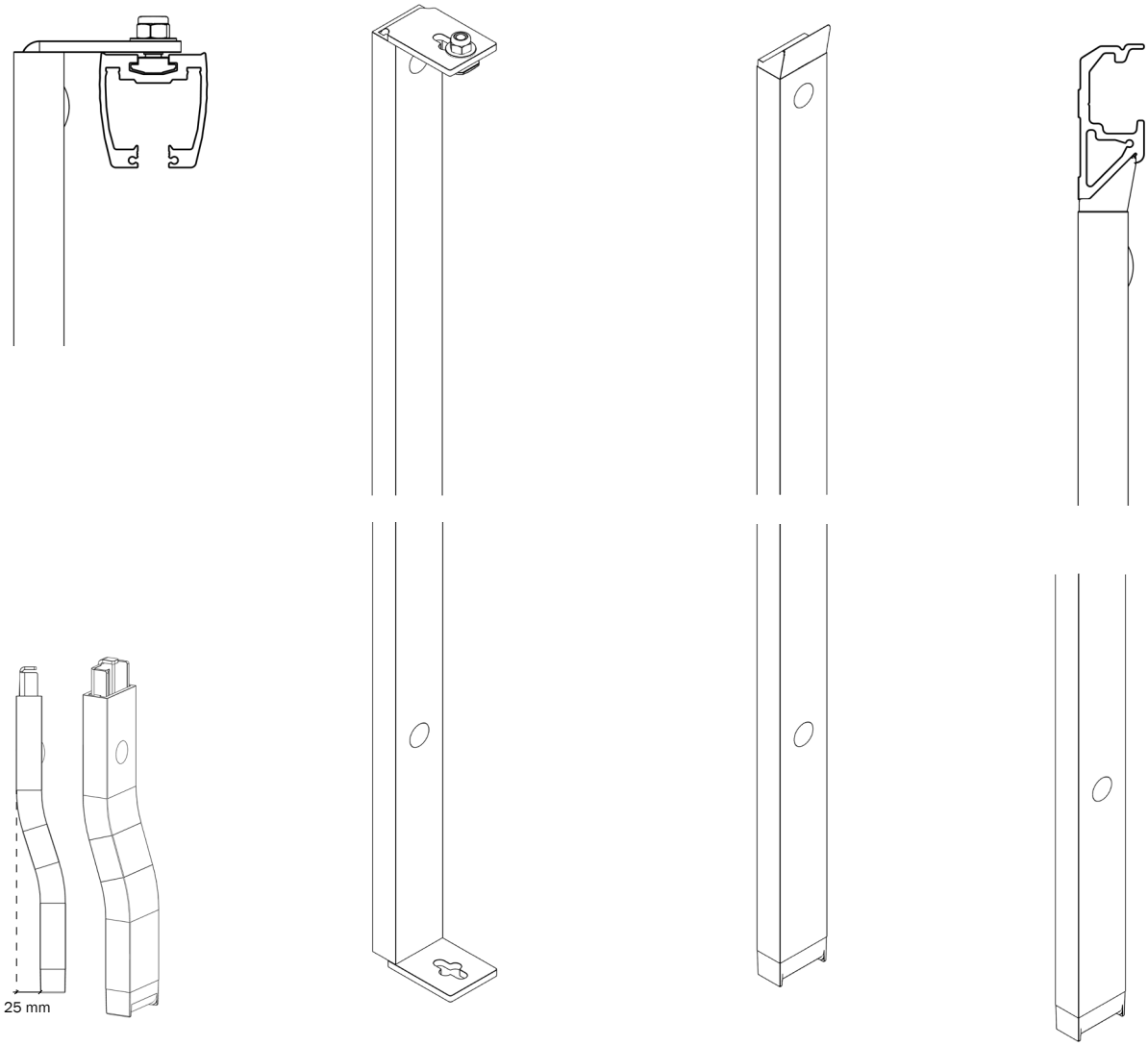

Fixings

Plasterboard brackets

Plasterboard brackets are used for mounting on plasterboard walls or on other types of lightweight wall structures.

A plasterboard bracket strengthens and stabilises the installation, making it possible to mount rail systems on plasterboard walls without underlying reinforcement.

Plasterboard brackets are mounted directly onto two layters of plasterboard (min. thickness: 26 mm).

Max. load for using plasterboard brackets: 350 kg.

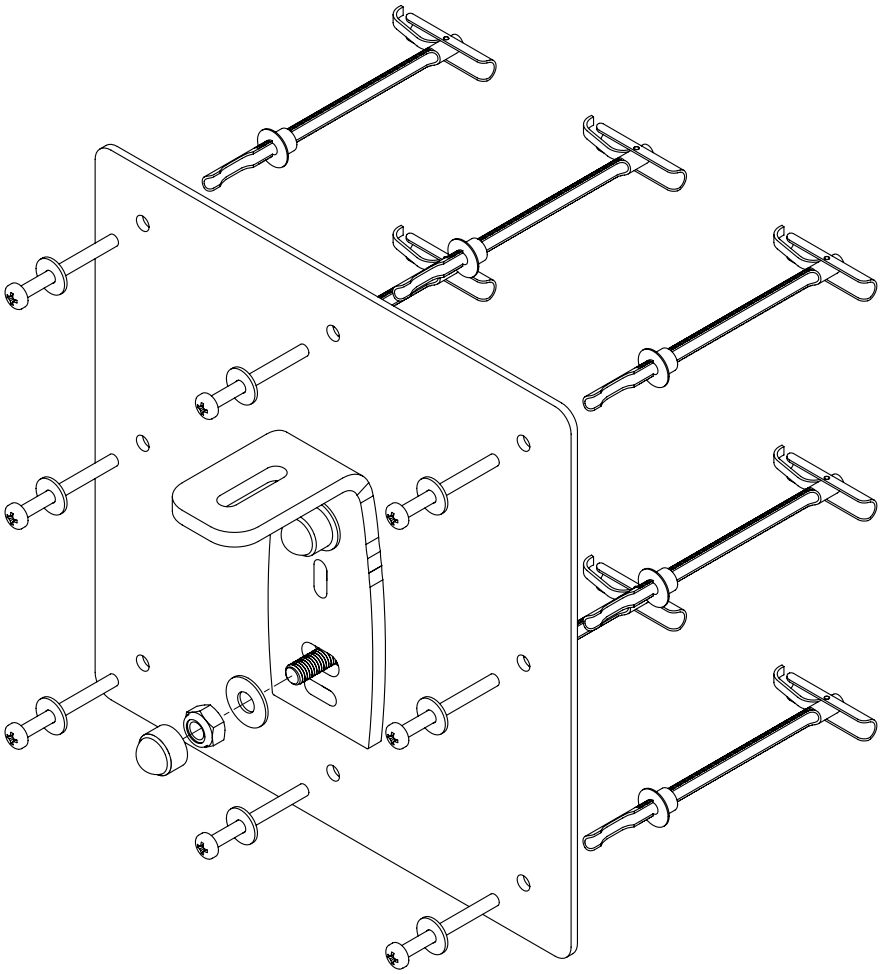

Reinforcements, ceiling installation

Wooden structures

When installing in wooden rafters, an interchange must be created between rafter feet for installing ceiling fittings.

Timber of 100 x 100 mm is used for reinforcement, with Simpson hangers Type BSNN 100/110.

The lower edge of the interchange must be level with the lower edge of the rafter foot.

It is important to install a shuttering board directly below the interchange.

A: Rafter foot

B: Timber – 100 x 100 mm

C: Hanger Simpson BSNN 100/110

D: Etac ceiling fixing

E: Shuttering board.

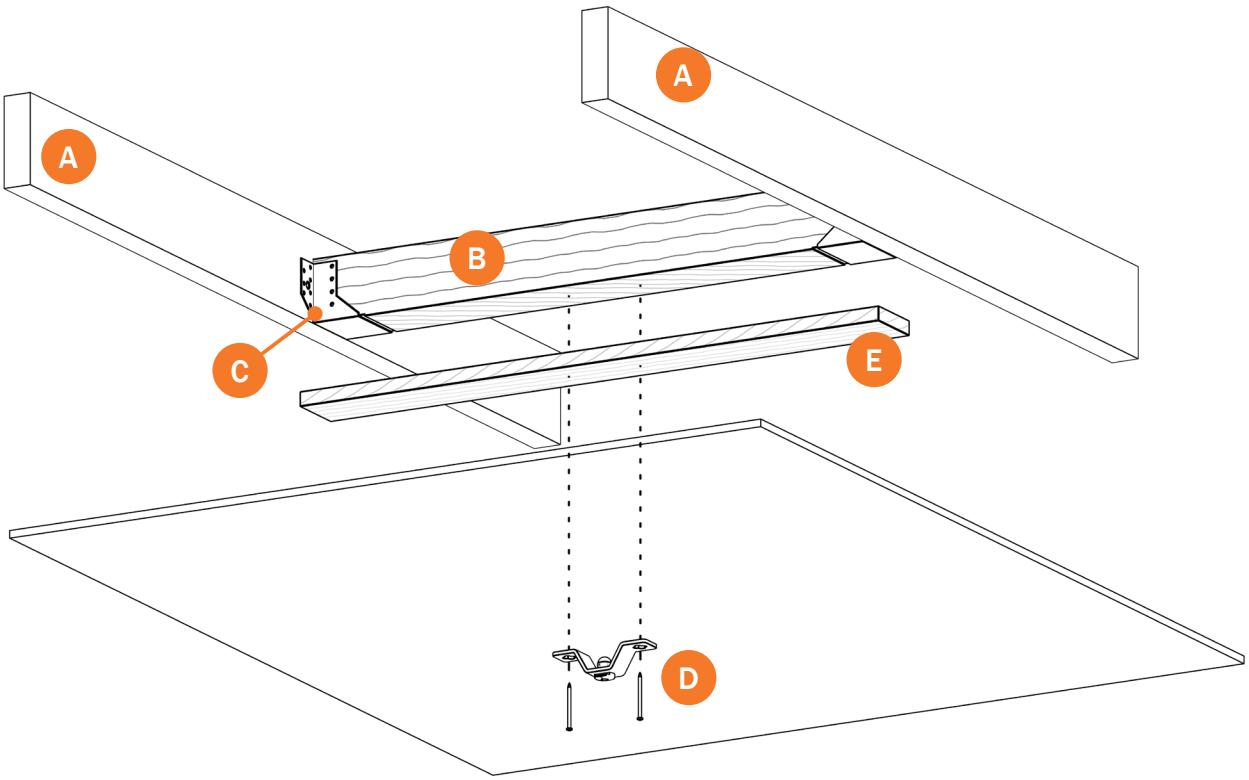

Reinforcements, ceiling installation

Coupling

When installing in wooden rafters, an interchange must be created between rafter feet for installing ceiling fittings.

With coupling systems, it is important that the interchange to primary rails is linked to the interchange to the coupling rail.

Timber 175 x 100 mm in size is installed in the centre of the door aperture and this is fixed to the side of 100 x 100 mm timber with four pieces. Simpson angle brackets, Type ABR 9020.

It is important to install a shuttering board directly below the interchange.

A: Rafter foot

B: Timber – 100 x 100 mm

C: Hanger Simpson BSNN 100/110

D: Molift ceiling fixing

E: Timber – 175 x 100 mm

F: Angle bracket Simpson ABR 9020

G: Shuttering board.

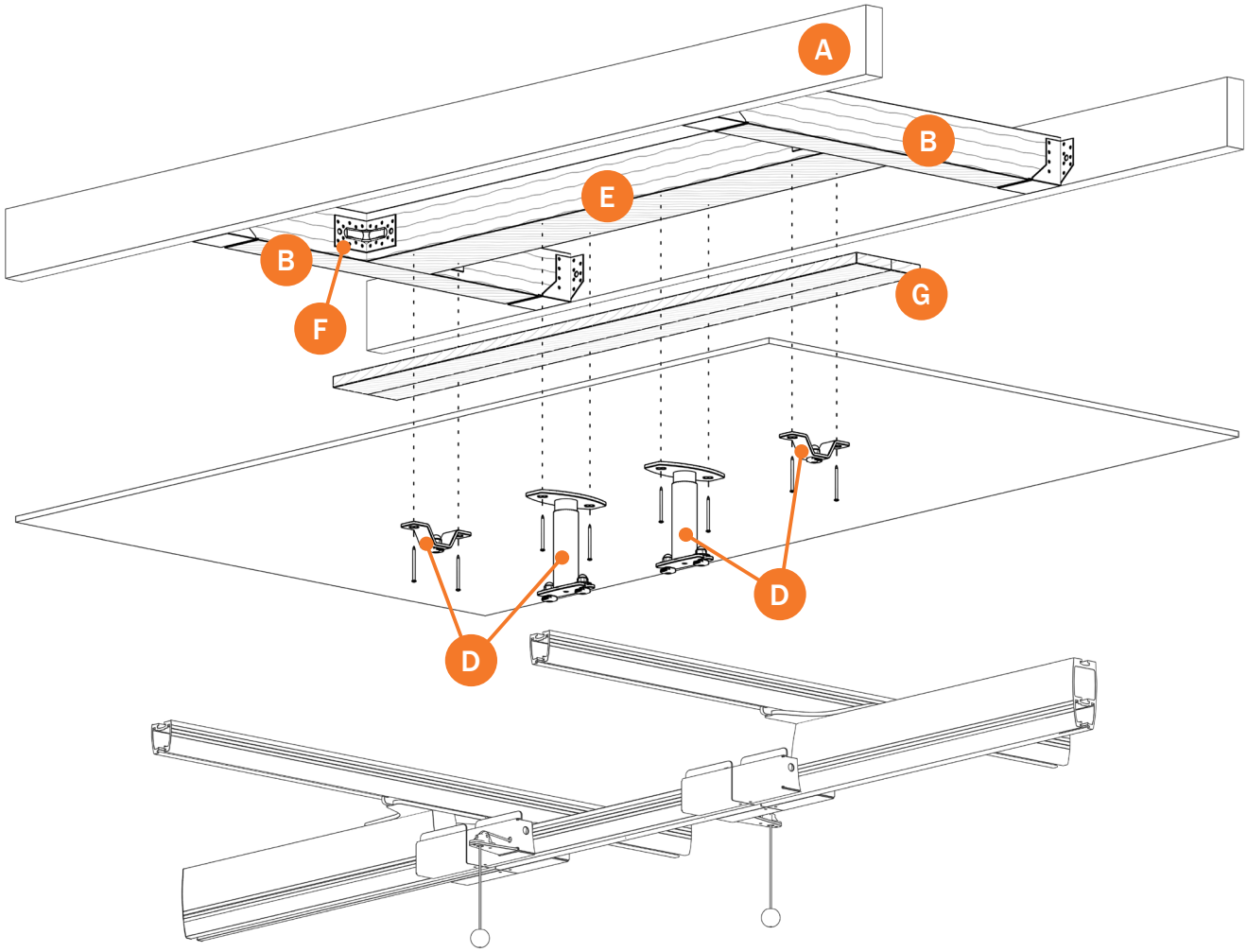

Reinforcements, wall installation

Plasterboard

For installation using standard wall fixings in plasterboard walls, it is necessary to reinforce the walls.

Reinforcement must be done with two 21 mm. birch plywood pieces – at each fixing point.

These should be mounted between the vertical steel crossbars/posts. Height 400 mm.

Reinforcement must be installed right up to the ceiling.

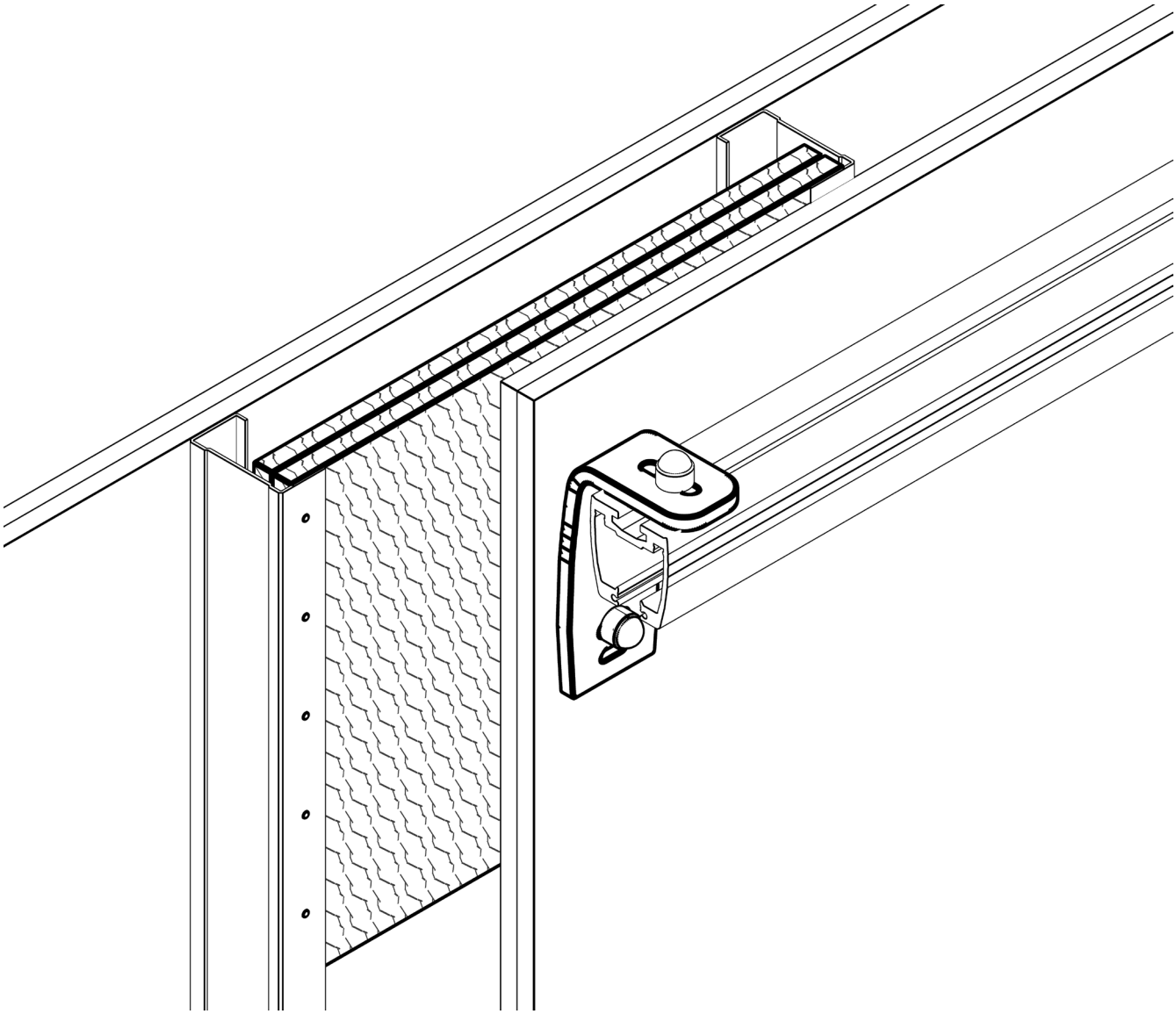

Electrical circuits

For manual charging

Placement of electricity supply (not provided by Etac).

230 V Electrical contact should be positioned on the floor – where the hoist will be parked for charging.

The Molift docking station for manual charging will be positioned at a height of 1200 mm above the floor.

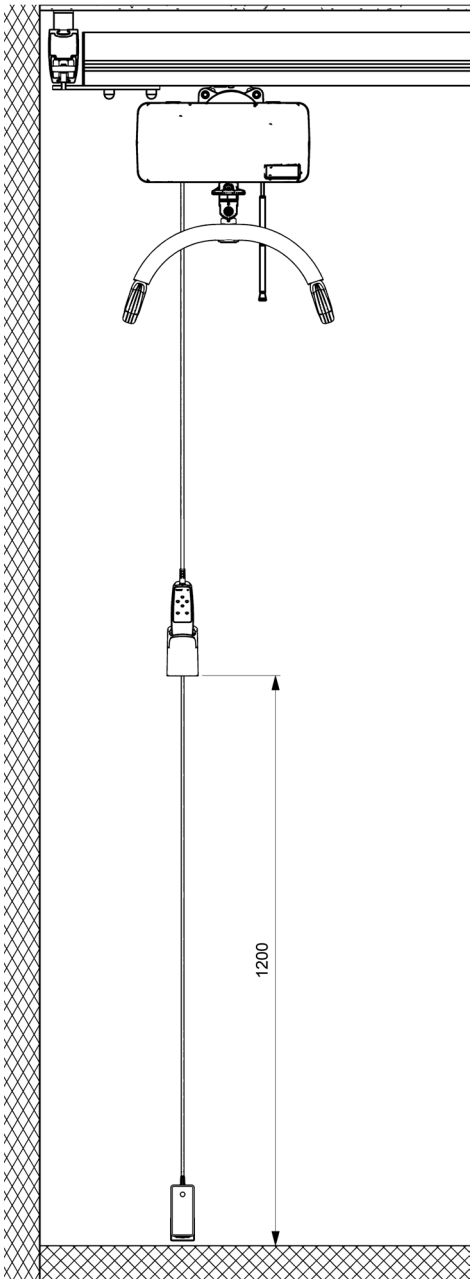

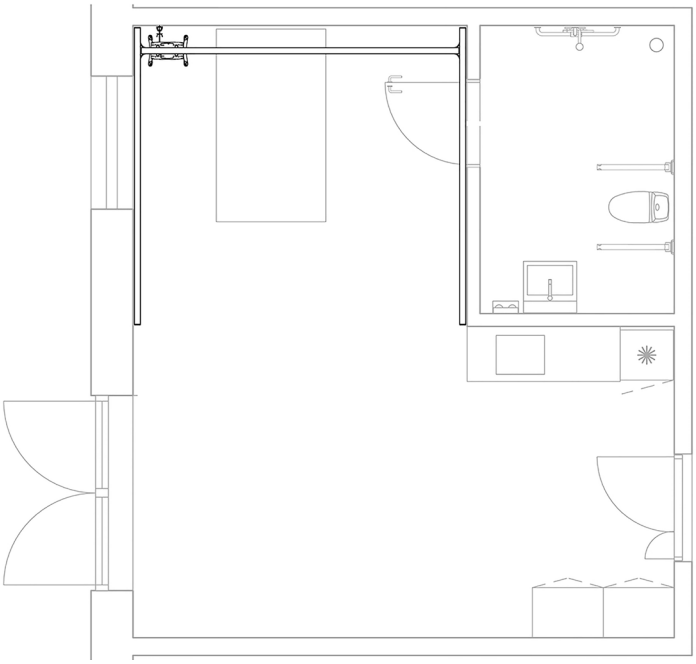

Electrical circuits

Charging in the rail system

230 V Electrical supply (not provided by Etac) must be installed in the corner close to the ceiling.

A Molift transformer must be placed between the rail and the electrical contact.

The ceiling hoist can be parked anywhere in the rail system.

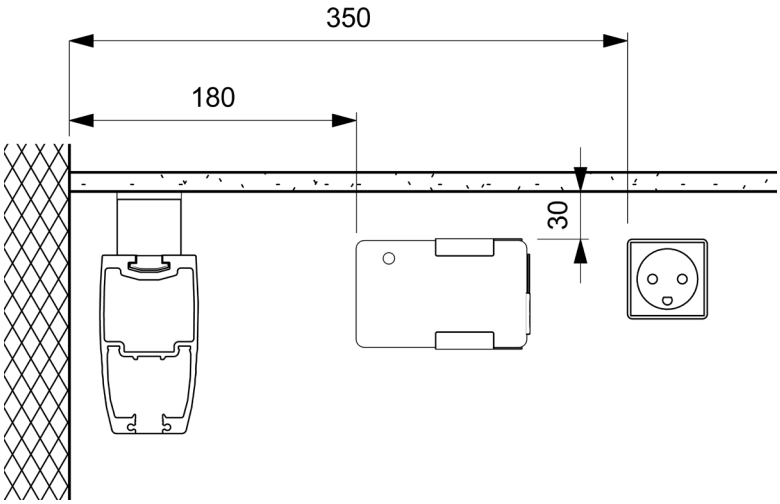

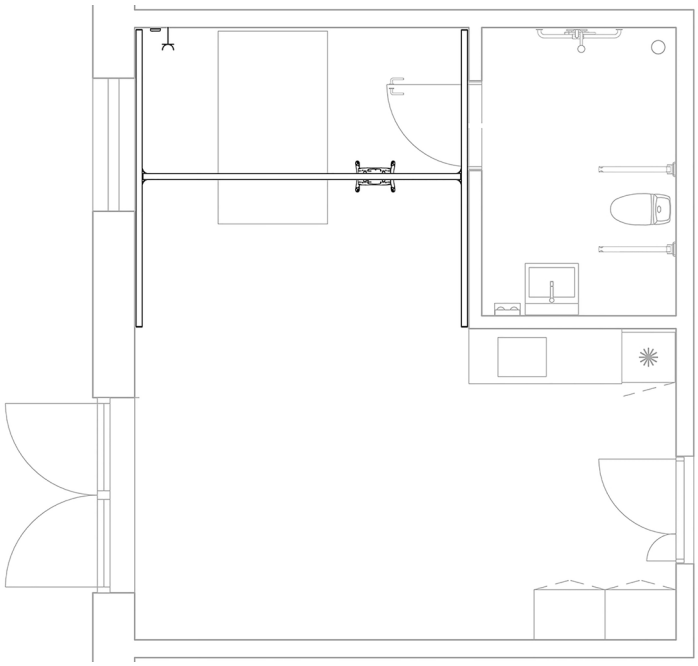

Etac A/S
Parallelvej 3
DK-8751 Gedved
www.etac.com

Creating Possibilities